Actuator

Series for Safety switches SLC

Description **ACS-1**	Article number **3911742390**

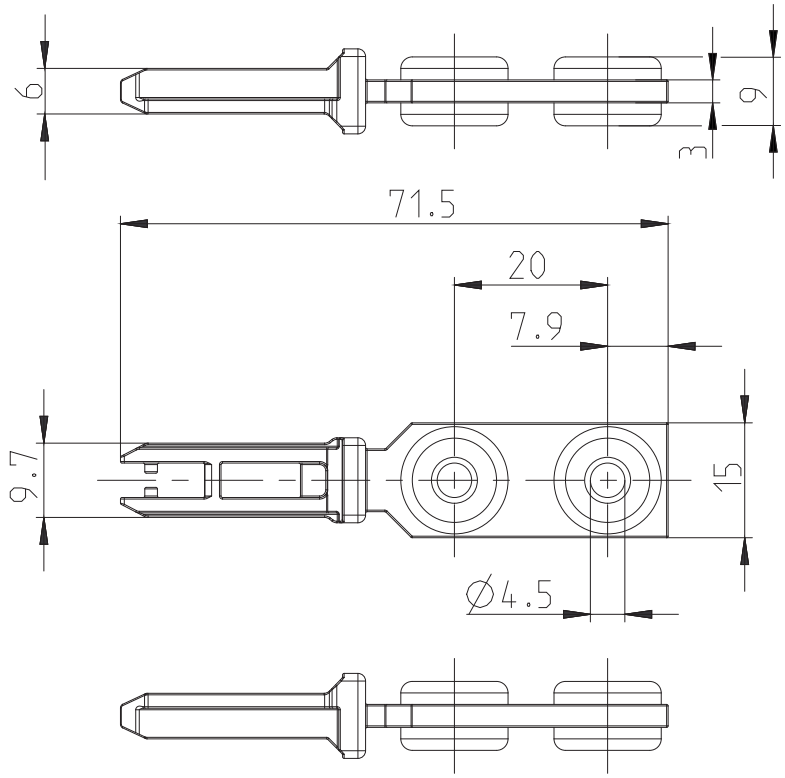

Mechanical data		
Actuator		Stainless steel (Niro) / PA
Grommet		CR
Socket		Steel
Minimum actuating radius	R_{min}	800 mm

Notes
The positive lock mounting must be made with Ø 12 M4 screws (ISO7093 / DIN 9021)!

Technical modifications and errors excepted.
The technical datasheet corresponds to the technical state as of 2019-01-22 and will not be removed in case of changes.