24571-585 RATIOPACPRO AIR 19" RACK MOUNT CASE, RETROFITTABLE SHIELDING, 3/4 U, 84 HP, 315 MM





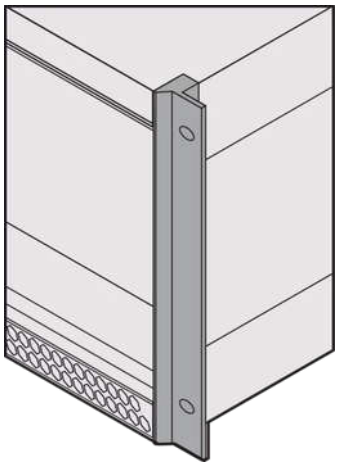



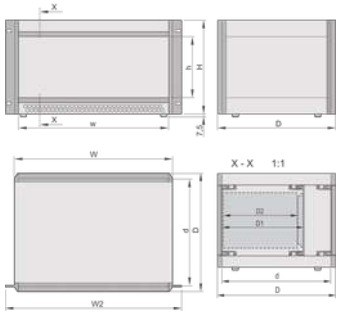

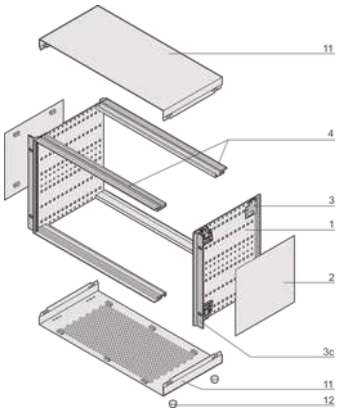

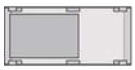

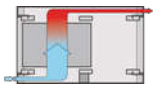

KEY FEATURES

- Cases for individual assembly with 19" standard components or specific internal mounting, e.g. with mounting plate
- Retrofittable EMC shielding
- Version with 19" mounting brackets, no visible screws
- The case has 2 x 1/2 U clearances for ventilation beneath and above the board cage
- For board depth 160 mm, 220 mm, 280 mm, and 340 mm (depending on case depth)
- Symmetrical design, identical front and rear side

Conforms with DIN EN 62368-1

PRODUCT ATTRIBUTES

Product Type: Case
Product Family: RatiopacPRO AIR
Type: Case for Individual Electronic Components
Rack Height: 3 U
Height: 177 mm
Usable Height: 112.3 mm
Rack Width: 84 HP
Width: 448.9 mm
Usable Width: 432 mm
Depth: 315.5 mm
EMC Shielding: No (Retrofittable)
Static Load: 25 kg
Protection Rating: IP20
Front Frame Construction: 19" Mounting Brackets; Horizontal Rails
Cooling Option: Yes
Complies With: IEC 60297-3-101; IEC 60297-3-102; IEEE 1101.1; IEEE 1101.10; IEEE 1101.11
Package Quantity: 1

ADDITIONAL PRODUCT DETAILS

The nVent SCHROFF RatiopacPRO case provides electronics protection for 19" and individual electronic assemblies. This flexible and robust case is simple to convert from desktop to a 19" rack mount case and includes four different style options. This version of the case provides advanced cooling capabilities and mounting brackets for assembly into a 19" rack.

Modifications (special colours or sizes).

Custom solutions (cut-outs in top cover, base plate or side panels).

Assembly service from 1 piece.

CERTIFICATIONS

RoHS COMPLIANT

North America
All locations
+1.763.422.2661
Chat with us:
schroff.nvent.com

Europe
Straubenhardt, Germany
+49.7082.794.0
Betschdorf, France
+33.3.88.90.64.90
Warsaw, Poland
+48.22.209.98.35
Assago, Italy
+39.02.932.7141
Chat with us:
schroff.nvent.com

Asia
Shanghai, China
+86.21.2412.6943
Qingdao, China
+86.532.8771.6101
Singapore
+65.6768.5800
Shin-Yokohama, Japan
+81.45.476.0271
Chat with us:
schroff.nvent.com

Middle East & India
Dubai, United Arab Emirates
+971.4.378.1700
Bangalore, India
+91.80.6715.2001
Istanbul, Turkey
+90.216.250.7374
Chat with us:
schroff.nvent.com

Our powerful portfolio of brands:
nVent.com **CADDY ERICO HOFFMAN RAYCHEM SCHROFF TRACER**

© 2023 nVent. All nVent marks and logos are owned or licensed by nVent Services GmbH or its affiliates. All other trademarks are the property of their respective owners.

nVent reserves the right to change specifications without notice.