PA3028

Pressure transmitter with ceramic measuring cell

PA-,25BRBR14-A-ZVG/US/ /V

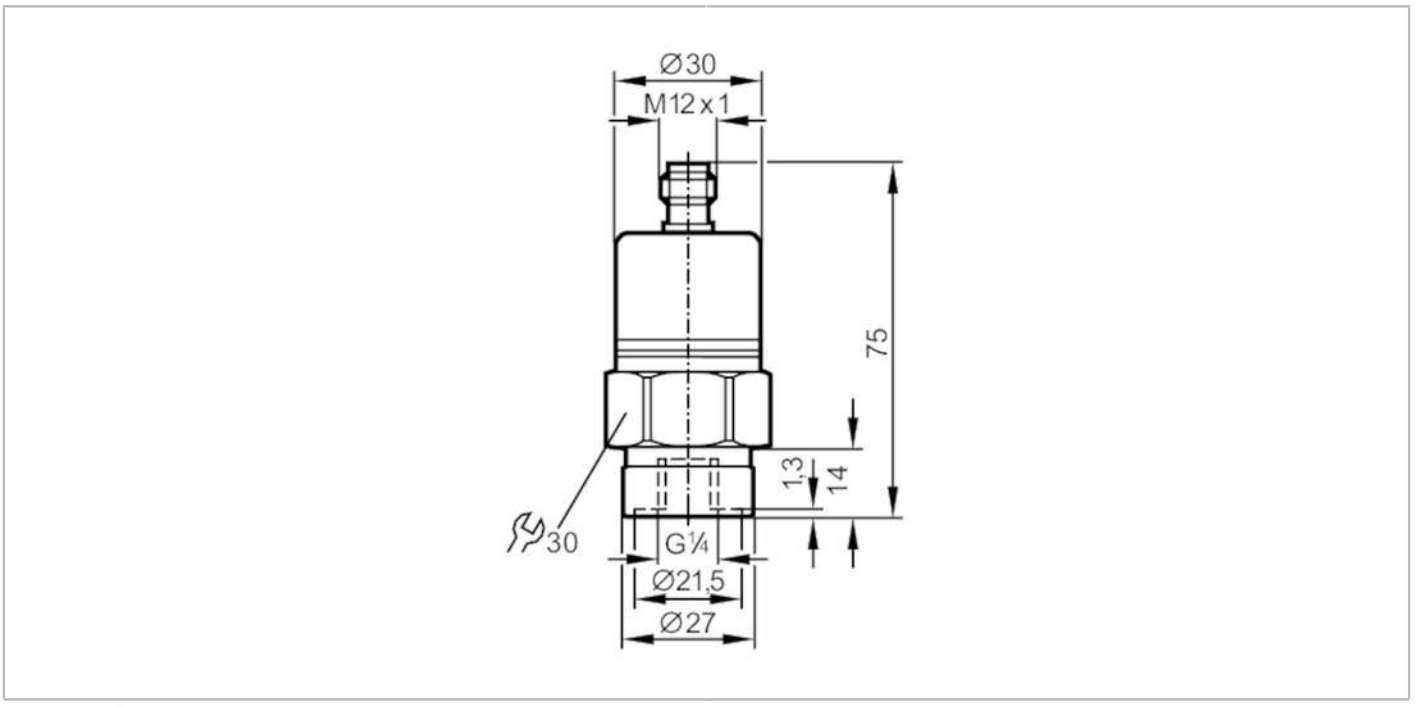

Product characteristics				
Number of inputs and outputs	Number of analogue outputs: 1			
Measuring range	0...0.25 bar	0...250 mbar	0...100.3 inH2O	0...25 kPa
Process connection	threaded connection G 1/4 internal thread			
Application				
Special feature	Gold-plated contacts			
Application	for industrial applications			
Media	liquids and gases			
Medium temperature [°C]	-25...90; (on request: -40...90 °C)			
Min. bursting pressure	30000 mbar	12030 inH2O	3000 kPa	
Pressure rating	6000 mbar	2400 inH2O	600 kPa	
Type of pressure	relative pressure			
Electrical data				
Operating voltage [V]	9.6...32 DC			
Min. insulation resistance [MΩ]	100; (500 V DC)			
Protection class	III			
Reverse polarity protection	yes			
Inputs / outputs				
Number of inputs and outputs	Number of analogue outputs: 1			
Outputs				
Total number of outputs	1			
Output signal	analogue signal			
Number of analogue outputs	1			
Analogue current output [mA]	4...20			

PA3028

Pressure transmitter with ceramic measuring cell

PA-,25BRBR14-A-ZVG/US/ /V

Max. load	[Ω]	720; (Ub = 24 V; (Ub - 9,6 V) / 20 mA)			
Overload protection		yes			
Measuring/setting range					
Measuring range		0...0.25 bar	0...250 mbar	0...100.3 inH2O	0...25 kPa
Accuracy / deviations					
Repeatability	[% of the span]	< 0,1; (with temperature fluctuations < 10 K)			
Characteristics deviation	[% of the span]	< ± 0,25 (BFSL) / < ± 0,5 (LS); (BFSL = Best Fit Straight Line; LS = limit value setting)			
Long-term stability	[% of the span]	< ± 0,05; (per 6 months)			
Temperature coefficient zero point	[% of the span / 10 K]	0,2; (0...80 °C)			
Temperature coefficient span	[% of the span / 10 K]	0,3; (0...80 °C)			
Response times					
Step response time analogue output	[ms]	3			
Operating conditions					
Ambient temperature	[°C]	-25...80			
Storage temperature	[°C]	-40...100			
Protection		IP 68; IP 69K			
Tests / approvals					
EMC		EN 61000-4-2 ESD		4 kV CD / 8 kV AD	
		EN 61000-4-3 HF radiated		30 V/m	
		EN 61000-4-4 Burst		2 kV	
		EN 61000-4-6 HF conducted		10 V	
		radiation of interference		according to the automotive directive 2004/104/EC	
		CISPR 25			
		immunity		according to the automotive directive 2004/104/EC	
		ISO 11452-2 HF radiated		100 V/m	
		ISO 7637-2 pulse		severity level 4	
Shock resistance		DIN EN 60068-2-27		50 g (11 ms)	
		DIN EN 61373		category 3	
Vibration resistance		DIN EN 60068-2-6		20 g (10...2000 Hz)	
		DIN EN 61373		category 2	
MTTF	[years]	514			
Pressure Equipment Directive		Sound engineering practice; can be used for group 2 fluids; group 1 fluids on request			
Railway applications		DIN EN 50155 / IEC 60571		Klasse T3, C1, S1	
Mechanical data					
Weight	[g]	220			
Housing		cylindrical			
Dimensions	[mm]	Ø 30 / L = 75			
Materials		stainless steel (316L/1.4404); FKM; PA; EPDM/X			
Materials (wetted parts)		stainless steel (303/1.4305); ceramics; FKM			

PA3028

Pressure transmitter with ceramic measuring cell

PA-,25BRBR14-A-ZVG/US/ /V

Min. pressure cycles	100 million
Process connection	threaded connection G 1/4 internal thread
Restrictor element integrated	no (can be retrofitted)

Remarks

Pack quantity	1 pcs.

Electrical connection

Connector: 1 x M12; coding: A; Contacts: gold-plated



Connection

