electronics



4114

Universal transmitter

No. 4114V104-UK
From ser. no. 121524001

LISTED

APPROVED

DK ▶ PR electronics A/S tilbyder et bredt program af analoge og digitale signalbehandlingsmoduler til industriel automation. Programmet består af Isolatorer, Displays, Ex-barrierer, Temperaturtransmittere, Universaltransmittere mfl. Vi har modulerne, du kan stole på i selv barske miljøer med elektrisk støj, vibrationer og temperaturudsving, og alle produkter opfylder de strengeste internationale standarder. Vores motto »Signals the Best« er indbegrebet af denne filosofi – og din garanti for kvalitet.

UK ▶ PR electronics A/S offers a wide range of analog and digital signal conditioning devices for industrial automation. The product range includes Isolators, Displays, Ex Interfaces, Temperature Transmitters, and Universal Devices. You can trust our products in the most extreme environments with electrical noise, vibrations and temperature fluctuations, and all products comply with the most exacting international standards. »Signals the Best« is the epitome of our philosophy – and your guarantee for quality.

FR ▶ PR electronics A/S offre une large gamme de produits pour le traitement des signaux analogiques et numériques dans tous les domaines industriels. La gamme de produits s'étend des transmetteurs de température aux afficheurs, des isolateurs aux interfaces SI, jusqu'aux modules universels. Vous pouvez compter sur nos produits même dans les conditions d'utilisation sévères, p.ex. bruit électrique, vibrations et fluctuations de température. Tous nos produits sont conformes aux normes internationales les plus strictes. Notre devise »SIGNALS the BEST« c'est notre ligne de conduite - et pour vous l'assurance de la meilleure qualité.

DE ▶ PR electronics A/S verfügt über ein breites Produktprogramm an analogen und digitalen Signalverarbeitungsgeräte für die industrielle Automatisierung. Dieses Programm umfasst Displays, Temperaturtransmitter, Ex- und galvanische Signaltrenner, und Universalgeräte. Sie können unsere Geräte auch unter extremen Einsatzbedingungen wie elektrisches Rauschen, Erschütterungen und Temperaturschwingungen vertrauen, und alle Produkte von PR electronics werden in Übereinstimmung mit den strengsten internationalen Normen produziert. »Signals the Best« ist Ihre Garantie für Qualität!

UNIVERSAL TRANSMITTER

4114

CONTENTS

Warning 2
Symbol identification 3
Safety instructions 3
How to demount system 4000 5
When front LED lights red / display shows AO.ER 5
Advanced features 6
Application 6
Technical characteristics 6
PR 4501 display / programming front 7
Mounting / demounting the PR 4501/4511 8
Applications 9
Order codes 10
Electrical specifications 10
Display readout on the 4501 of sensor error detection and input signal outside range 13
  Sensor error detection limits 14
  Error indications 14
Connections 15
Block diagram 16
Configuration / operating the function keys 17
Routing diagram 20
Routing diagram, Advanced settings (ADV.SET) 22
Scrolling help text in display line 3 23



GENERAL

WARNING

This device is designed for connection to hazardous electric voltages.
Ignoring this warning can result in severe personal injury or mechanical damage.
To avoid the risk of electric shock and fire, the safety instructions of this manual must be observed and the guidelines followed.
The specifications must not be exceeded, and the device must only be applied as described in the following.
Prior to the commissioning of the device, this manual must be examined carefully.
Only qualified personnel (technicians) should install this device.
If the equipment is used in a manner not specified by the manufacturer, the protection provided by the equipment may be impaired.



HAZARDOUS VOLTAGE

WARNING

Until the device is fixed, do not connect hazardous voltages to the device.
The following operations should only be carried out on a disconnected device and under ESD safe conditions:

General mounting, connection and disconnection of wires.
Troubleshooting the device.



Repair of the device and replacement of circuit breakers must be done by PR electronics A/S only.



INSTAL-LATION

WARNING

SYSTEM 4000 must be mounted on a DIN rail according to DIN 46277.



WARNING

Do not open the front plate of the module as this will cause damage to the connector for the display / programming front PR 4501. This module contains no DIP-switches or jumpers.

SYMBOL IDENTIFICATION



Triangle with an exclamation mark: Warning / demand.
Potentially lethal situations.

The CE mark proves the compliance of the device with the essential requirements of the directives.



The double insulation symbol shows that the device is protected by double or reinforced insulation.

SAFETY INSTRUCTIONS

DEFINITIONS
Hazardous voltages have been defined as the ranges: 75 to 1500 Volt DC, and 50 to 1000 Volt AC.
Technicians are qualified persons educated or trained to mount, operate, and also troubleshoot technically correct and in accordance with safety regulations.
Operators, being familiar with the contents of this manual, adjust and operate the knobs or potentiometers during normal operation.

RECEIPT AND UNPACKING
Unpack the module without damaging it. The packing should always follow the module until this has been permanently mounted.
Check at the receipt of the module whether the type corresponds to the one ordered.

ENVIRONMENT
Avoid direct sunlight, dust, high temperatures, mechanical vibrations and shock, as well as rain and heavy moisture. If necessary, heating in excess of the stated limits for ambient temperatures should be avoided by way of ventilation.
All devices fall under Installation Category II, Pollution Degree 1, and Insulation Class II.

MOUNTING
Only technicians who are familiar with the technical terms, warnings, and instructions in the manual and who are able to follow these should connect the device.
Should there be any doubt as to the correct handling of the device, please contact your local distributor or, alternatively,

PR electronics A/S
www.prelectronics.com

Mounting and connection of the device should comply with national legislation for mounting of electric materials, i.e. wire cross section, protective fuse, and location. Descriptions of input / output and supply connections are shown in the block diagram and side label.

The following apply to fixed hazardous voltages-connected devices:

The max. size of the protective fuse is 10 A and, together with a power switch, it should be easily accessible and close to the device. The power switch should be marked with a label indicating that it will switch off the voltage to the device.

Year of manufacture can be taken from the first two digits in the serial number.

UL INSTALLATION REQUIREMENTS

Use 60/75°C copper conducters only
For use only in pollution degree 2 or better
Max. ambient temperature ..... 60°C
Max. wire size..... AWG 26-14
UL file number E231911

CALIBRATION AND ADJUSTMENT

During calibration and adjustment, the measuring and connection of external voltages must be carried out according to the specifications of this manual. The technician must use tools and instruments that are safe to use.

NORMAL OPERATION

Operators are only allowed to adjust and operate devices that are safely fixed in panels, etc., thus avoiding the danger of personal injury and damage. This means there is no electrical shock hazard, and the device is easily accessible.

CLEANING

When disconnected, the device may be cleaned with a cloth moistened with distilled water.

LIABILITY

To the extent that the instructions in this manual are not strictly observed, the customer cannot advance a demand against PR electronics A/S that would otherwise exist according to the concluded sales agreement.

HOW TO DEMOUNT SYSTEM 4000

First, remember to demount the connectors with hazardous voltages.

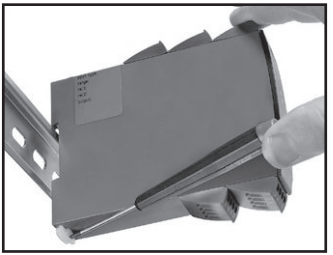

Picture 1:
Detach the device from the DIN rail by lifting the bottom lock.

When front LED lights red / display shows AO.ER

PR 4114 is designed as a SIL 2 device with a high safety level. Therefore, a continuous measurement of the outgoing current is carried out on a 4...20 mA and 20...4 mA output signal. If the current output signal is different from the internal calculated output value or the current output is 0 (due to e.g. an open circuit breakage), an error mode switches on the red front LED.
This function is not a default option but must be actively selected via the programming menu (S4-20 & S20-4).
The error mode can only be reset by switching off and then switching on the supply voltage to the device.

UNIVERSAL TRANSMITTER
4114

- *Input for RTD, TC, Ohm, potentiometer, mA and V*
- *2-wire supply > 16 V*
- *FM-approved for installation in Div. 2*
- *Output for current and voltage*
- *Universal AC or DC supply*

Advanced features

- Programmable by way of detachable display front (4501), process calibration, signal simulation, password protection, error diagnostics and help text available in several languages.

Application

- Linearised, electronic temperature measurement with RTD or TC sensor.
- Conversion of linear resistance variation to a standard analogue current / voltage signal, i.e. from solenoids and butterfly valves or linear movements with attached potentiometer.
- Power supply and signal isolator for 2-wire transmitters.
- Process control with standard analogue output.
- Galvanic separation of analogue signals and measurement of floating signals.
- The 4114 is designed according to strict safety requirements and is thus suitable for application in SIL 2 installations.

Technical characteristics

- When 4114 is used in combination with the 4501 display / programming front, all operational parameters can be modified to suit any application. As the 4114 is designed with electronic hardware switches, it is not necessary to open the device for setting of DIP-switches.
- A green / red front LED indicates normal operation and malfunction.
- Continuous check of vital stored data for safety reasons.
- 3-port 2.3 kVAC galvanic isolation.

PR 4501 DISPLAY / PROGRAMMING FRONT



Functionality

The simple and easily understandable menu structure and the explanatory help texts guide you effortlessly and automatically through the configuration steps, thus making the product very easy to use. Functions and configuration options are described in the section "Configuration / operating the function keys".

Application

- Communications interface for modification of operational parameters in 4114.
- Can be moved from one 4114 device to another and download the configuration of the first transmitter to subsequent transmitters.
- Fixed display for readout of process data and status.

Technical characteristics

- LCD display with 4 lines; Line 1 (H=5.57 mm) shows input signal, line 2 (H=3.33 mm) shows units, line 3 (H=3.33 mm) shows analogue output or tag no. and line 4 shows communication status.
- Programming access can be blocked by assigning a password. The password is saved in the transmitter in order to ensure a high degree of protection against unauthorised modifications to the configuration.

Mounting / installation

- Click 4501 onto the front of 4114.

MOUNTING / DEMOUNTING THE PR 4501/4511

1: Insert the taps of 4501/4511 into the holes at the top of the device.
2: Swing 4501/4511 into place.

Demounting of 4501/4511

3: Push the release button on the bottom of 4501/4511 and swing 4501/4511 up.

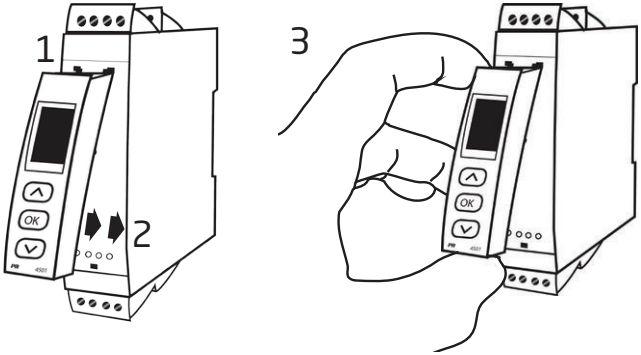

APPLICATIONS

Input signals:

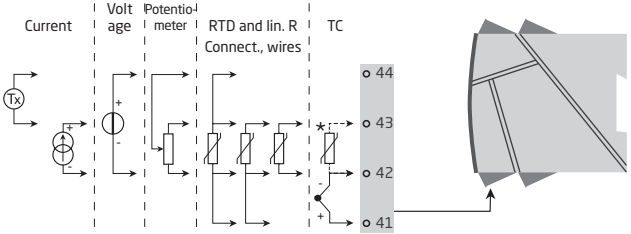

Order separately: 5910 CJC connector.
See the connection drawing on page 15.

Output signals:

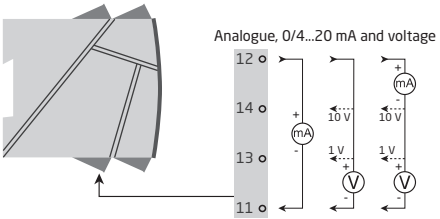

Supply:

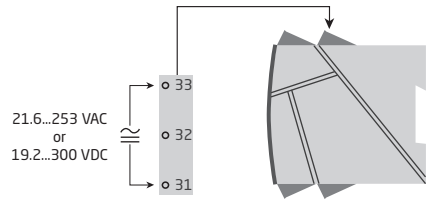

Order codes

4114 = Universal transmitter
4501 = Display / programming front
5910 = CJC connector

Electrical specifications

Environmental conditions

Specifications range	-20°C to +60°C
Calibration temperature	20...28°C
Relative humidity	< 95% RH (non-cond.)
Protection degree	IP20

Mechanical specifications

Dimensions (HxBxD)	109 x 23.5 x 104 mm
Dimensions, with 4501 / 4511 (HxBxD)	109 x 23.5 x 116 / 131 mm
Weight	145 g
Weight with 4501 / 4511	160 g / 245 g
Max. wire size	1 x 2.5 mm^2 stranded wire
Screw terminal torque	0.5 Nm
Vibration	IEC 60068-2-6 : 2007
2...13.2 Hz	±1 mm
13.2...100 Hz	±0.7 g

Common specifications

Supply voltage, universal	21.6...253 VAC, 50...60 Hz or 19.2...300 VDC
Max. consumption	≤ 2.0 W
Fuse	400 mA SB / 250 VAC
Isolation voltage, test / operation	2.3 kVAC / 250 VAC
Communications interface	Communication enabler 4511 Programming front 4501
Signal / noise ratio	Min. 60 dB (0...100 kHz)
Response time (0...90%, 100...10%):	
Temperature input	≤ 1 s
mA / V input	≤ 400 ms

Accuracy, the greater of the general and basic values:

General values		
Input type	Absolute accuracy	Temperature coefficient
All	≤ ±0.1% of span	≤ ±0.01% of span / °C

Basic values		
Input type	Basic accuracy	Temperature coefficient
mA	≤ ±4 µA	≤ ±0.4 µA / °C
Volt	≤ ±20 µV	≤ ±2 µV / °C
Pt100	≤ ±0.2°C	≤ ±0.01°C / °C
Linear resistance	≤ ±0.1 Ω	≤ ±0.01 Ω / °C
Potentiometer	≤ ±0.1 Ω	≤ ±0.01 Ω / °C
TC type: E, J, K, L, N, T, U	≤ ±1°C	≤ ±0.05°C / °C
TC type: R, S, W3, W5, LR	≤ ±2°C	≤ ±0.2°C / °C
TC type: B 85...200°C	≤ ±4°C	≤ ±0.4°C / °C
TC type: B 200...1820°C	≤ ±2°C	≤ ±0.2°C / °C

EMC immunity influence ..... < ±0.5% of span
Extended EMC immunity:
NAMUR NE 21, A criterion, burst ..... < ±1% of span

Auxiliary supplies:
2-wire supply (terminal 44...43) ..... 25...16 VDC / 0...20 mA

RTD, linear resistance and potentiometer input

Input for RTD types:
Pt10, Pt20, Pt50, Pt100, Pt200, Pt250, Pt300, Pt400, Pt500, Pt1000
Ni50, Ni100, Ni120, Ni1000, Cu10, Cu20, Cu50, Cu100

Input type	Min. value	Max. value	Standard
Pt10...Pt1000	-200°C	+850°C	IEC 60751
Ni50...Ni1000	-60°C	+250°C	DIN 43760
Cu10...Cu100	-200°C	+260°C	α = 0,00427
Lin. R	0 Ω	10000 Ω	-
Potentiometer	10 Ω	100 kΩ	-

Cable resistance per wire (max.), RTD ..... 50 Ω
Sensor current, RTD ..... Nom. 0.2 mA
Effect of sensor cable resistance
(3- / 4-wire), RTD ..... < 0.002 Ω / Ω
Sensor error detection, RTD ..... Yes
Short circuit detection, RTD ..... < 15 Ω

TC input

Type	Min. value	Max. value	Standard
B	0°C	+1820°C	IEC 60584-1
E	-100°C	+1000°C	IEC 60584-1
J	-100°C	+1200°C	IEC 60584-1
K	-180°C	+1372°C	IEC 60584-1
L	-200°C	+900°C	DIN 43710
N	-180°C	+1300°C	IEC 60584-1
R	-50°C	+1760°C	IEC 60584-1
S	-50°C	+1760°C	IEC 60584-1
T	-200°C	+400°C	IEC 60584-1
U	-200°C	+600°C	DIN 43710
W3	0°C	+2300°C	ASTM E988-90
W5	0°C	+2300°C	ASTM E988-90
LR	-200°C	+800°C	GOST 3044-84

Cold junction compensation (CJC)
- via external sensor in connector 5910 ..... 20...28°C ≤ ±1°C
  -20...20°C /
  28...70°C ≤±2°C
- via internal CJC sensor ..... ±(2.0°C + 0.4°C * Δt)

Δt = internal temperature - ambient temperature

Sensor error detection, all TC types..... Yes

Sensor error current:
- when detecting..... Nom. 2 µA
- else ..... 0 µA

Current input

Measurement range..... 0...20 mA
Programmable measurement ranges..... 0...20 and 4...20 mA
Input resistance..... Nom. 20 Ω + PTC 50 Ω
Sensor error detection:
- Loop break 4...20 mA..... Yes

Voltage input

Measurement range..... 0...12 VDC
Programmable measurement ranges..... 0...1 / 0.2...1 / 0...5 / 1...5 /
0...10 and 2...10 VDC
Input resistance..... Nom. 10 MΩ

Current output

Signal range (span)	0...20 mA
Programmable signal ranges	0...20 / 4...20 / 20...0 / 20...4 mA
Load (max.)	20 mA / 800 Ω / 16 VDC
Load stability	≤ 0.01% of span / 100 Ω
Sensor error detection	0 / 3.5 / 23 mA / none
NAMUR NE 43 Upscale / Downscale	23 mA / 3.5 mA
Output limitation:	
on 4...20 and 20...4 mA signals	3.8...20.5 mA
on 0...20 and 20...0 mA signals	0...20.5 mA
Current limit	≤ 28 mA

Voltage output

Signal range	0...10 VDC
Programmable signal ranges	0...1 / 0.2...1 / 0...10 / 0...5 / 1...5 / 2...10 / 1...0 / 1...0.2 / 5...0 / 5...1 / 10...0 and 10...2 V
Load (min.)	500 kΩ

Ex / I.S. approval

FM, applicable in	Class I, Div. 2, Group A, B, C, D Class I, Div. 2, Group IIC Zone 2
Max. ambient temperature for T5	60°C

Marine approval:

Det Norske Veritas, Ships & Offshore	Standard for Certification No. 2.4

Observed authority requirements	**Standard**
EMC 2004/108/EC	EN 61326-1
LVD 2006/95/EC	EN 61010-1
FM	3600, 3611, 3810 and ISA 82.02.01
UL, Standard for Safety	UL 508
EAC TR-CU 020/2011	EN 61326-1

of span = of the currently selected measurement range

Display readout on the 4501 of sensor error detection and input signal outside range

Sensor error check:		
Device:	Configuration	Sensor error detection:
4114	OUT.ERR=NONE.	OFF
	Else:	ON

Outside range readout (IN.LO, IN.HI): If the valid range of the A/D converter or the polynomial is exceeded			
Input	Range	Readout	Limit
VOLT	0...1 V / 0.2...1 V	IN.LO	< -25 mV
		IN.HI	> 1.2 V
	0...10 V / 2...10 V	IN.LO	< -25 mV
		IN.HI	> 12 V
CURR	0...20 mA / 4...20 mA	IN.LO	< -1.05 mA
		IN.HI	> 25.05 mA
LIN.R	0...800 Ω	IN.LO	< 0 Ω
		IN.HI	> 1075 Ω
	0...10 kΩ	IN.LO	< 0 Ω
		IN.HI	< 110 kΩ
POTM	-	IN.LO	< -0.5 %
		IN.HI	> 100.5 %
TEMP	TC / RTD	IN.LO	< temperature range -2°C
		IN.HI	> temperature range +2°C

Display readout below min.- / above max. (-1999, 9999):			
Input	Range	Readout	Limit
All	All	-1999	Display readout <-1999
		9999	Display readout >9999

Sensor error detection limits

Sensor error detection (SE.BR, SE.SH):			
Input	Range	Readout	Limit
CURR	Loop break (4..20 mA)	SE.BR	<= 3.6 mA; > = 21 mA
POTM	All, SE.BR on all 3-wire	SE.BR	> ca. 126 kΩ
LIN.R	0...800 Ω	SE.BR	> ca. 875 Ω
	0...10 kΩ	SE.BR	> ca. 11 kΩ
TEMP	TC	SE.BR	> ca. 750 kΩ / (1.25 V)
	RTD, 2-, 3-, and 4-wire	SE.BR	> ca. 15 kΩ
	No SE.SH for Cuxx, Pt10, Pt20 and Pt50	SE.SH	< ca. 15 Ω

Error indications

Readout at hardware error		
Error search	Readout	Error cause
Test of internal CJC sensor	CJ.ER	CJC sensor defect or temperature outside range
Checksum test of the configuration in FLASH	FL.ER	Error in FLASH
Check measurement of analogue output current	AO.ER	1) No load on the current output (only S4...20/S20...4 mA)
Communications test 4501 / 4114	NO.CO	Connection error
Check that input signal matches input configuration	IN.ER	1) Error levels on input
Check that saved configuration in 4501 matches device	TY.ER	Configuration is not 4114

! Error indications in the display flash once per second. The help text explains the error.
1) The error is reset by switching off and then switching on the supply voltage to the device.

CONNECTIONS

Supply:

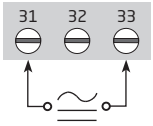

Inputs

RTD, 2-wire

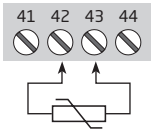

RTD, 3- / 4-wire

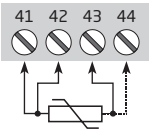

TC, internal CJC sensor

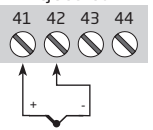

Resistance, 2-wire

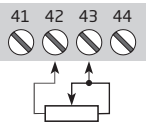

Resistance, 3- / 4-wire

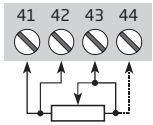

Potentiometer

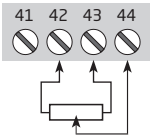

2-wire transmitter

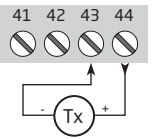

Current

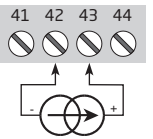

Voltage

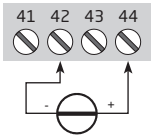

*TC, external CJC connector

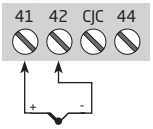

* Order separately: CJC connector 5910

Outputs

Current

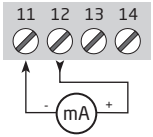

Voltage, 1 V

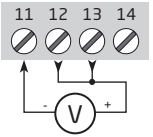

Voltage, 10 V

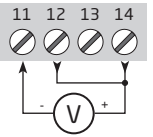

BLOCK DIAGRAM

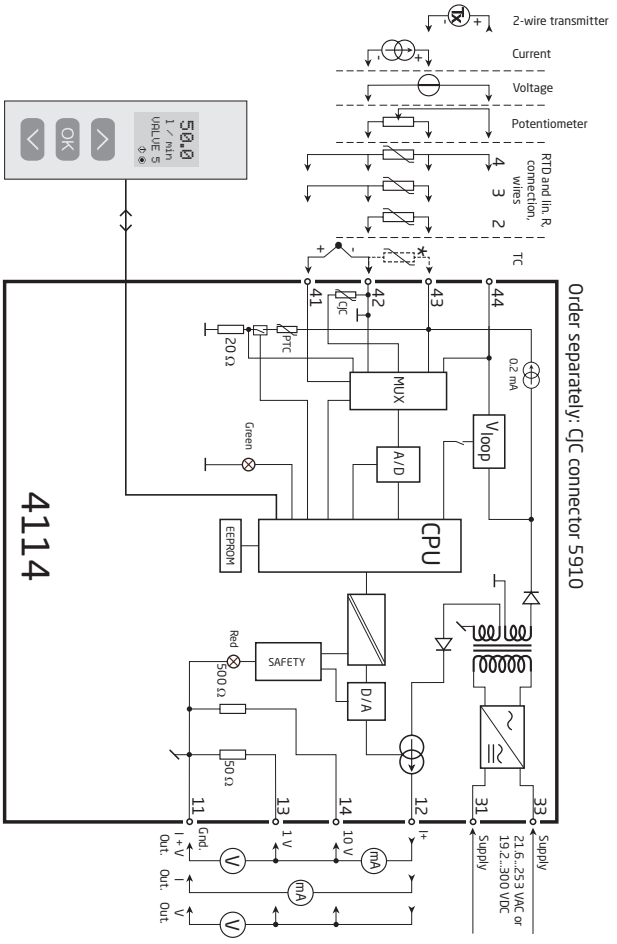

CONFIGURATION / OPERATING THE FUNCTION KEYS

Documentation for routing diagram.

In general:

When configuring the 4114, you will be guided through all parameters and you can choose the settings which fit the application. For each menu there is a scrolling help text which is automatically shown in line 3 on the display.

Configuration is carried out by using the 3 function keys:

- ⌃ will increase the numerical value or choose the next parameter
- ⌄ will decrease the numerical value or choose the previous parameter
- OK will accept the chosen value and proceed to the next menu

When configuration is completed, the dispaly will return to the default state 1.0.

Pressing and holding OK will return to the previous menu or return to the default state (1.0) without saving the changed values or parameters.

If no key is activated for 1 minute, the display will return to the default state (1.0) without saving the changed values or parameters.

Further explanations:

Password protection: Programming access can be blocked by assigning a password. The password is saved in the transmitter in order to ensure a high degree of protection against unauthorised modifications to the configuration. Default password 2008 allows acces to all configuration menus.

Signal and sensor error info via display front 4501

Sensor error (see limits in the table) is displayed as SE.BR (sensor break) or SE.SH (sensor short). Signals outside the selected range (not sensor error, see table for limits) are displayed as IN.LO indicating low input signal or IN.HI indicating high input signal. The error indication is displayed in line 3 as text and at the same time the backlight flashes. Line 4 of the display is a status line which displays COM (flashing bullet) indicating correct functioning of 4501, and arrow up/down which indicates tendency readout of the input signal.

Signal and sensor error indication without display front

Status of the unit can also be read from the red/green LED in the front of the device.

Green flashing LED 13 Hz indicates normal operation.

Green flashing LED 1 Hz indicates sensor error.

Steady green LED indicates internal error.

Steady red LED indicates fatal error.

Advanced functions

The unit gives access to a number of advanced functions which can be reached by answering "Yes" to the point "adv.set".

Display setup: Here you can adjust the brightness contrast and the backlight. Setup of TAG number with 6 alphanumerics. Selection of functional readout in line 3 of the display - choose between readout of analogue output or TAG number.

Two-point process calibration: The unit can be process-calibrated in 2 points to fit a given input signal. A low input signal (not necessarily 0%) is applied and the actual value is entered via 4501. Then a high signal (not necessarily 100%) is applied and the actual value is entered via 4501. If you accept to use the calibration, the unit will work according to this new adjustment. If you later reject this menu point or choose another type of input signal the unit will return to factory calibration.

Process simulation function: If you say "yes" to the point "EN.SIM" it is possible to simulate an input signal by means of the arrow keys and thus control the output signal up or down. When you finalise the point with OK, the unit returns to normal mode.

Password: Here you can choose a password between 0000 and 9999 in order to protect the unit against unauthorised modifications to the configuration. The unit is delivered default without password. If you have locked the unit with a password by mistake, you can always open the menu by using the master password 2008.

Language: In the menu "lang.setup" you can choose between 7 different language versions of help texts that will appear in the menu. You can choose between UK, DE, FR, IT, ES, SE and DK.

Auto diagnosis

The unit performs an advanced auto diagnosis of the internal circuits.
The following possible errors can by display in the front unit 4501.

- CJ.ER - CJC sensor defect or CJC temperature outside range
- FL.ER - Flash error
- AO.ER - No load on the current output (only for S4...20 mA/S20...4 mA)
- NO.CO - Connection error
- IN.ER - Error levels on input
- TY.ER - Configuration in 4501 does not match this product type

Selection of units

After choosing the input signal type you can choose the process units which will be displayed in text line 2 (see table). By selection of temperature input the process value is always displayed in Celsius or Fahrenheit. This is selected in the menu point after selection of temperature input.

Safety readback

When the device is delivered with default configuration, the SIL function is disabled. The safety readback function (loop surveillance) can be selected in the menu O.RANGE, thus enabling the device to run in SIL mode. In order to enable the SIL functionality, the menu item S4...20 mA must be selected. Please note, however, that when safety readback is enabled, a sensor error will be indicated as an error on the analogue output signal.

CJC

In the CJC menu you can choose between external CJC connector and internal cold junction compensation. The external CJC connector (PR 5910) must be ordered separately.

Memory

In the memory menu you can save the configuration of the device in the 4501, and then move the 4501 onto another device of the same type and download the configuration in the new device.

ROUTING DIAGRAM

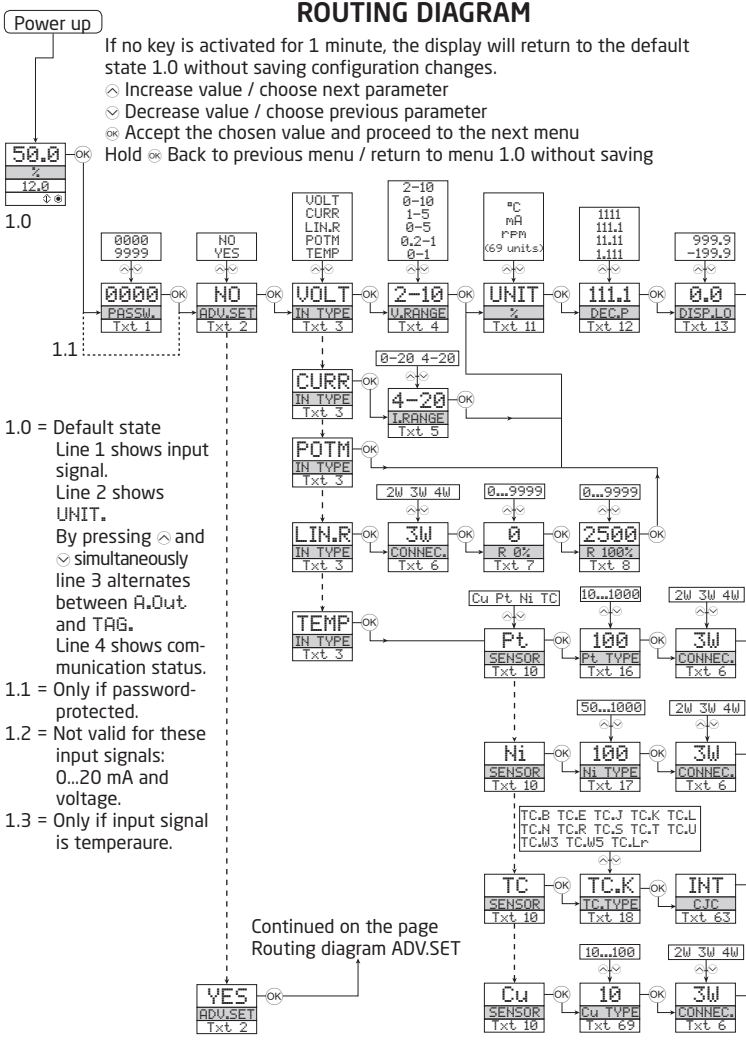

1.0 = Default state
Line 1 shows input signal.
Line 2 shows UNIT.
By pressing ⌃ and ⌄ simultaneously line 3 alternates between A.Out and TAG.
Line 4 shows communication status.

1.1 = Only if password-protected.

1.2 = Not valid for these input signals: 0...20 mA and voltage.

1.3 = Only if input signal is temperaure.

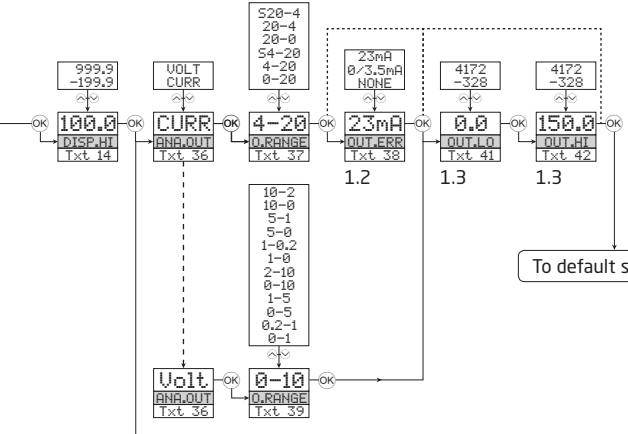

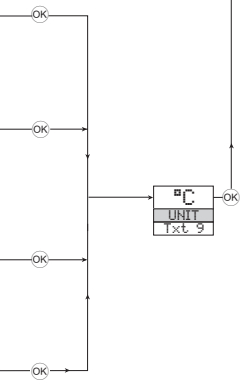

Selectable UNITS:

°C	hP	kW	mA	pH
°F	hPa	kWh	mbar	rpm
%	Hz	l	mils	s
A	in	l/h	min	S
bar	in/h	l/min	mm	t
cm	in/min	l/s	mm/s	t/h
ft	in/s	m	mol	uA
ft/h	ips	m/h	MPa	um
ft/min	K	m/min	mV	uS
ft/s	kA	m/s	MW	V
g	kg	m/s2	MWh	W
gal/h	kJ	m3	N	Wh
gal/min	kPa	m3/h	Ohm	yd
GW	kV	m3/min	Pa	[blank]

ROUTING DIAGRAM, ADVANCED SETTINGS (ADV.SET)

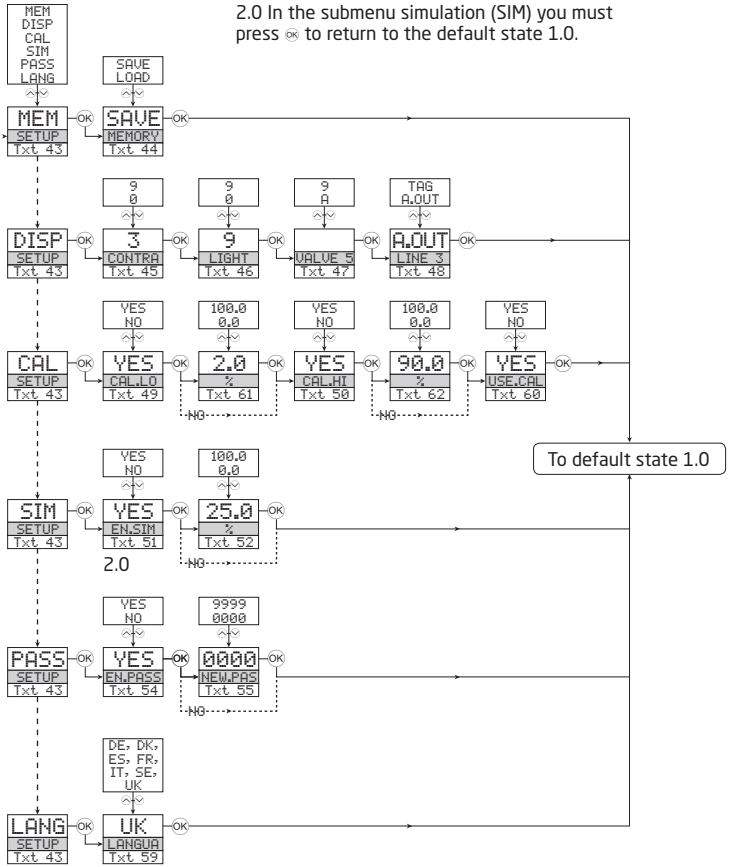

SCROLLING HELP TEXT IN DISPLAY LINE 3

[01] Set correct password
[02] Enter advanced setup menu?
[03] Select temperature input
Select potentiometer input
Select linear resistance input
Select current input
Select voltage input
[04] Select 0.0-1 V input range
Select 0.2-1 V input range
Select 0-5 V input range
Select 1-5 V input range
Select 0-10 V input range
Select 2-10 V input range
[05] Select 0-20 mA input range
Select 4-20 mA input range
[06] Select 2-wire sensor connection
Select 3-wire sensor connection
Select 4-wire sensor connection
[07] Set resistance value low
[08] Set resistance value high
[09] Select Celsius as temperature unit
Select Fahrenheit as temperature unit
[10] Select TC sensor type
Select Ni sensor type
Select Pt sensor type
Select Cu sensor type
[11] Select display unit
[12] Select decimal point position
[13] Set display range low
[14] Set display range high
[16] Select Pt10 as sensor type
Select Pt20 as sensor type
Select Pt50 as sensor type
Select Pt100 as sensor type
Select Pt200 as sensor type
Select Pt250 as sensor type
Select Pt300 as sensor type
Select Pt400 as sensor type
Select Pt500 as sensor type
Select Pt1000 as sensor type
[17] Select Ni50 as sensor type
Select Ni100 as sensor type
Select Ni120 as sensor type
Select Ni1000 as sensor type
[69] Select Cu10 as sensor type
Select Cu20 as sensor type
Select Cu50 as sensor type
Select Cu100 as sensor type
[18] Select TC-B as sensor type
Select TC-E as sensor type
Select TC-J as sensor type
Select TC-K as sensor type
Select TC-L as sensor type
Select TC-N as sensor type
Select TC-R as sensor type
Select TC-S as sensor type
Select TC-T as sensor type
Select TC-U as sensor type
Select TC-W3 as sensor type
Select TC-W5 as sensor type
Select TC-Lr as sensor type
[36] Select current as analogue output type
Select voltage as analogue output type
[37 Select 0-20 mA output range
Select 4-20 mA output range
Select S4-20 mA with safety readback
Select 20-0 mA output range
Select 20-4 mA output range
Select S20-4 mA with safety readback
[38] Select no error action - output undefined at error
Select downscale at error
Select NAMUR NE43 downscale at error
Select NAMUR NE43 upscale at error
[39] Select 0.0-1 V output range
Select 0.2-1 V output range
Select 0-5 V output range
Select 1-5 V output range
Select 0-10 V output range
Select 2-10 V output range
Select 1-0.0 V output range
Select 1-0.2 V output range
Select 5-0 V output range
Select 5-1 V output range
Select 10-0 V output range
Select 10-2 V output range
[41] Set temperature for analogue output low
[42] Set temperature for analogue output high
[43] Enter password setup
Enter simulation mode
Perform process calibration
Enter display setup
Perform memory operations
[44] Load saved configuration into 4114
Save 4114 configuration in 4501
[45] Adjust LCD contrast
[46] Adjust LCD backlight
[47] Write a 6-character device TAG
[48] Analogue output value is shown in display line 3
Device TAG is shown in display line 3
[49] Calibrate input low to process value?
[50] Calibrate input high to process value?
[51] Enable simulation mode?
[52] Set the input simulation value
[54] Enable password protection?
[55] Set new password
[59] Select language
[60] Use process calibration values?
[61] Set value for low calibration point
[62] Set value for high calibration point
[63] Select CJC connector (accessory)
Select internal temperature sensor

Displays Programmable displays with a wide selection of inputs and outputs for display of temperature, volume and weight, etc. Feature linearization, scaling, and difference measurement functions for programming via PReset software.

Ex interfaces Interfaces for analog and digital signals as well as HART® signals between sensors / I/P converters / frequency signals and control systems in Ex zone 0, 1 & 2 and for some devices in zone 20, 21 & 22.

Isolation Galvanic isolators for analog and digital signals as well as HART signals. A wide product range with both loop-powered and universal isolators featuring linearization, inversion, and scaling of output signals.

Temperature A wide selection of transmitters for DIN form B mounting and DIN rail devices with analog and digital bus communication ranging from application-specific to universal transmitters.

Universal PC or front programmable devices with universal options for input, output and supply. This range offers a number of advanced features such as process calibration, linearization and auto-diagnosis.



www.prelectronics.fr
sales-fr@prelectronics.com

www.prelectronics.de
sales-de@prelectronics.com

www.prelectronics.es
sales-es@prelectronics.com

www.prelectronics.it
sales-it@prelectronics.com

www.prelectronics.se
sales-se@prelectronics.com

www.prelectronics.com
sales-uk@prelectronics.com

www.prelectronics.com
sales-us@prelectronics.com

www.prelectronics.cn
sales-cn@prelectronics.com

www.prelectronics.be
sales-be@prelectronics.com

Head office

Denmark
PR electronics A/S
Lerbakken 10
DK-8410 Rønde

www.prelectronics.com
sales-dk@prelectronics.com
tel. +45 86 37 26 77
fax +45 86 37 30 85

DS CERTIFIED
QUALITY SYSTEM AND ENVIRONMENTAL MANAGEMENT SYSTEM
DS/EN ISO 9001
DS/EN ISO 14001
DANAK