Brand of NTN corporation

Technical data



6213FT150

Single row deep groove ball bearings

TOPLINE deep groove ball bearing, radial contact, pressed steel cage, contact seals on both sides, applications up to 150°C.

TOPLINE

VISUAL (S)

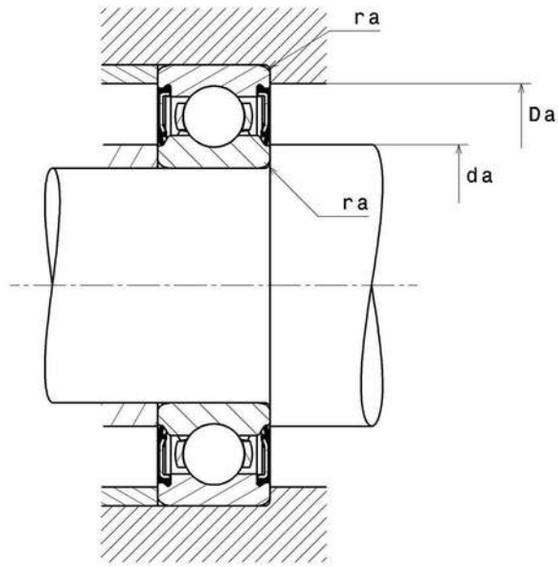

6213FT150
Single row deep groove ball bearings

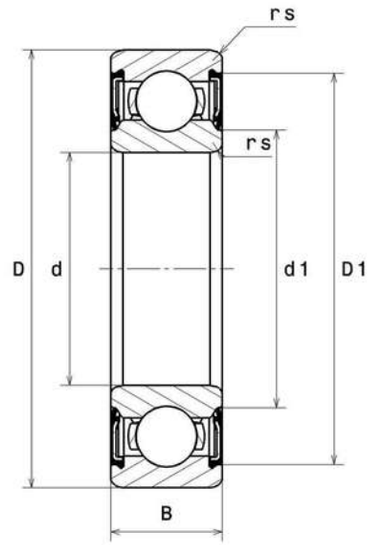

PRODUCT DEFINITION	
Brand	SNR
d - Internal diameter	65 mm
D - External diameter	120 mm
B - Bearing/Inner ring width	23 mm
d1 - External diameter inner ring	77,5 mm
D1 - Inner diameter outer ring	107,8 mm
rs - Min fillet radius	1,5 mm
Radial clearance class	C3
Mass	0,99 kg

PRODUCT PERFORMANCE	
C - Dynamic load	60300000 mN
C0 - Static load	40100000 mN
Cu - Fatigue limit load	1820000 mN

6213FT150
Single row deep groove ball bearings

PRODUCT PERFORMANCE	
f0 - Coefficient	14.4
N lim - Mechanical Limit Speed	21600 °/s
Tmin - Min operating temperature	243,15 °K
Tmax - Max operating temperature	423,15 °K

BEARING FREQUENCIES	
BPFO - Over rolling frequency on outer ring (60 rpm)	4.099 Hz
BPFI - Over rolling frequency on inner (60 rpm)	5.901 Hz
BSF - Over rolling frequency on rolling element (60 rpm)	5.369 Hz
BRF - Rotational frequency – rolling element (60 rpm)	2.685 Hz
FTF - Rotational frequency - cage (60 rpm)	0.41 Hz

ABUTMENT	
da min - Min shoulder diameter IR	73 mm
da max - Max shoulder diameter IR	77,5 mm
Da max - Max shoulder diameter OR	112 mm
ra max - Max shaft & housing fillet radius	1,5 mm

INDUSTRY CALCUL FACTORS

Equivalent dynamic radial load

P = X.Fr + Y.Fa

$\frac{f_0 F_a}{C_0}$	e	Fa / Fr ≤ e		Fa / Fr > e	
		X	Y	X	Y
0.172	0.19	1	0	0.56	2.3
0.345	0.22				1.99
0.689	0.26				1.71
1.03	0.28				1.55
1.38	0.3				1.45
2.07	0.34				1.31
3.45	0.38				1.15
5.17	0.42				1.04
6.89	0.44				1

Equivalent static radial load

Po = Xo.Fr + Yo.Fa

X_0	Y_0
0.6	0.5

For single or DT bearing arrangement :

If Po <Fr, then use Po = Fr