ELLIPSOID HIGH POWER HID 220-240V

SLD9850X2E40

34,0 W - 5000lm - 3000K



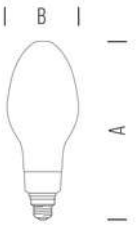

DIMENSIONS	A	B	C
1	215	90	

GENERAL INFORMATIONS	
Code	SLD9850X2E40
Ean	8031453028558
Family	ELLIPSOID HIGH POWER HID
Product line	HID
Technology	LED
Operating temperature (° C)	-20 - +40
Years warranty	3

LIGHTING DATA	
Light colour	WW
CCT (K)	3000
Luminous)ux (lm)	5000
Beam (°)	330
Luminous Efflcacy (lm/W)	147
Color rendering (CRI)	>80

TECHNICAL FEATURES	
Base	E40
Power (W)	34,0
Energy Consumption ON mode (kWh/1000h)	34
Equivalence (W)	-
Supply voltage (V) / Max (V)	220 / 240
Power frequency (Hz)	50/60
Power factor	>0,90
Dimmer compatibility	NO
On/off cycles	20000
Nominal life (h)	25000
Directional / Non-directional	NDLS
Mains voltage YES / NO	MLS
Connected Source (CLS)	NO

PACKAGING	
Packaging	BOX
Pack	6 / 6
Gross weight (Kg)	2.2
Net weight (Kg)	0.16

ELLIPSOID HIGH POWER HID 220-240V

SLD9850X2E40

34,0W - 5000lm - 3000K

- Power surge protection system up to 4kV

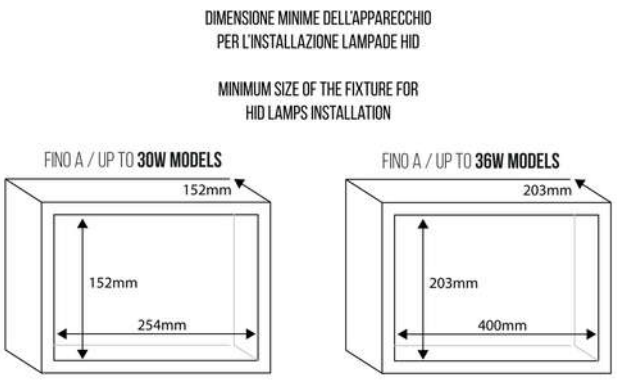



Bot Lighting srl con unico socio
Via Lombardia, 37/39 – 30030 Cazzago di Pianiga (VE) Italy - T. +39.041.51.29.411 – F. +39.041.51.01.715
www.botlighting.it – ordini@botlighting.it – info@botlighting.it
NOTE: dati soggetti a modifiche senza preavviso | NOTE: data subject to change without notice

Release 4/11/2024