LP4P2B5900

CONTROL STATION FOR 40MM PROFILE RAILS WITH MUSHROOM HEAD PUSHBUTTON, LATCH, TURN TO RELEASE FOR EMERGENCY STOPPING, 2NC AND WHITE FLUSH ILLUMINATED PUSHBUTTON, SPRING RETURN, 5…35VAC/DC, 1NO



General characteristics			
Colour			Yellow
Contact configuration			2NC+1NO
LED pin number			5-6
IEC degree of protection			IP65
Electrical characteristics			
Rated operating voltage		VAC	5…35 VAC/DC
Rated operating current		mA	1...100
Maximum consumption		mW	250
Operations			
Electrical life		cycles	50.000
B10d		cycles	130.000
Mechanical features			
Connection			8-pin M12 connector
Fixing			For 40mm profile rails
Weight		g	116
UL technical data			
UL degree of protection			Type 1
Ambient conditions			
Temperature			
	Operating temperature		
	min	°C	-25
	max	°C	+70
	Storage temperature		
	min	°C	-40
	max	°C	+80

Dimensions

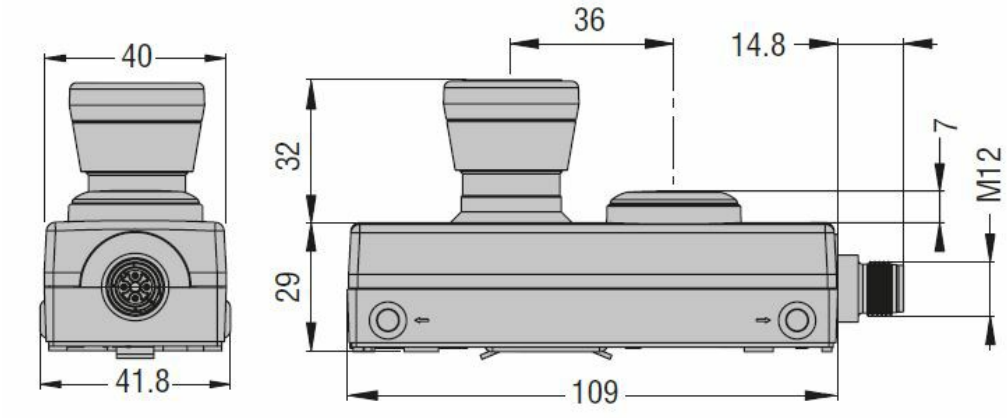

Wiring diagrams

The characteristics described in this document are subject to updates or modifications at any time. The descriptions, technical and functional information, illustrations and instructions in this brochure are purely illustrative, and are consequently not contractually binding

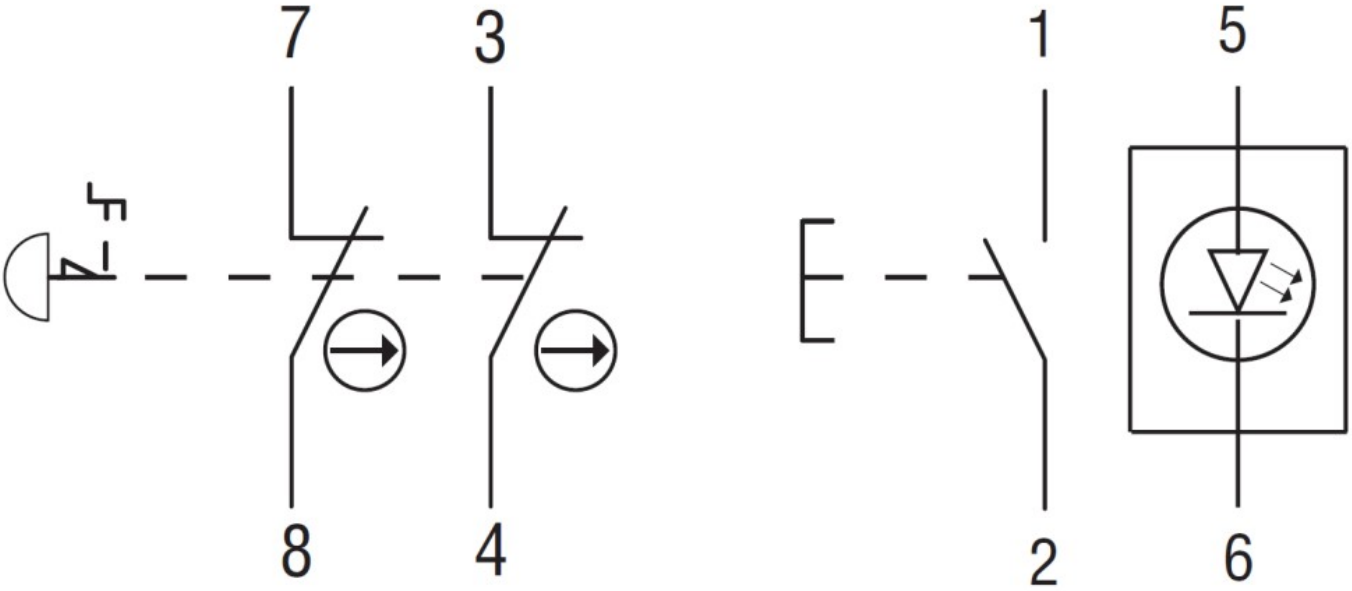

Certifications and compliance

Compliance

CSA C22.2 No. 60947-1-13
CSA C22.2 No. 60947-5-1-14
IEC/EN/BS 60947-5-1
UL 60947-1
UL 60947-5-1
UL 60947-5-5
UL508A

Certificates

UR

The characteristics described in this document are subject to updates or modifications at any time. The descriptions, technical and functional information, illustrations and instructions in this brochure are purely illustrative, and are consequently not contractually binding