Brand of NTN corporation

Technical data

5202EEG15

Double row angular contact ball bearings

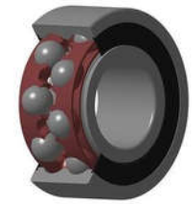

VISUAL (S)

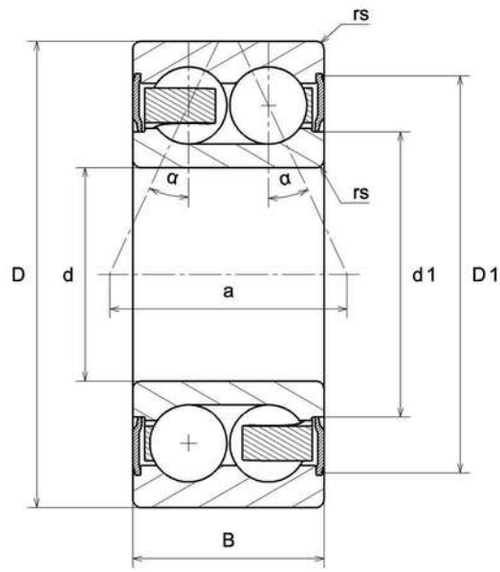

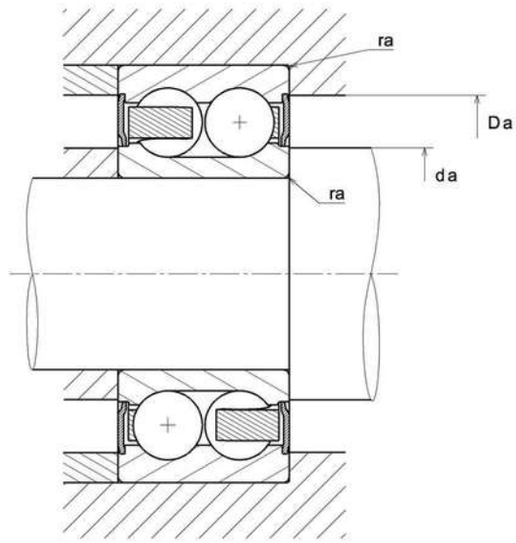

NTN Europe
1 rue des Usines · BP 2017 · 74010 Annecy Cedex · France · Tel. +33 (0)4 50 65 30 00
S.A. au capital de 322 639 919 € · RCS ANNECY B 325 821 072 · Id. Fiscale : FR 48 325 821 072
SIRET 325 821 072 00015 · Code APE 2815 Z · Code NACE 28.15

5202EEG15
Double row angular contact ball bearings

PRODUCT DEFINITION	
Brand	SNR
d - Internal diameter	15 mm
D - External diameter	35 mm
B - Bearing/Inner ring width	15,9 mm
d1 - External diameter inner ring	21,1 mm
D1 - Inner diameter outer ring	31,5 mm
a - Charge load application point	18 mm
- Contact angle	25 °
rs - Min fillet radius	0,6 mm
Radial clearance class	CN
Precision class	P0
Mass	0,058 kg

PRODUCT PERFORMANCE	
C - Dynamic load	11,4 kN
C0 - Static load	7,1 kN
Cu - Fatigue limit load	0,48 kN
f0 - Coefficient	13.5
Nlim - Mechanical Limit Speed	14000 tr/min
Tmin - Min operating temperature	-20 °C
Tmax - Max operating temperature	120 °C

BEARING FREQUENCIES	
BPFO - Characteristic outer ring frequency (60 rpm)	3.13 Hz
BPFI - Characteristic inner ring frequency (60 rpm)	4.87 Hz

BEARING FREQUENCIES	
FTF - Characteristic cage frequency (60 rpm)	0.391 Hz
BSF - Characteristic rolling element frequency (60 rpm)	3.97 Hz

ABUTMENT	
da min - Min shoulder diameter IR	19 mm
da max - Max shoulder diameter IR	21,1 mm
Da max - Max shoulder diameter OR	31 mm
ra max - Max shaft & housing fillet radius	0,6 mm