U.49P2 | U.49P - CLAMPS FOR INSIDE GRIP



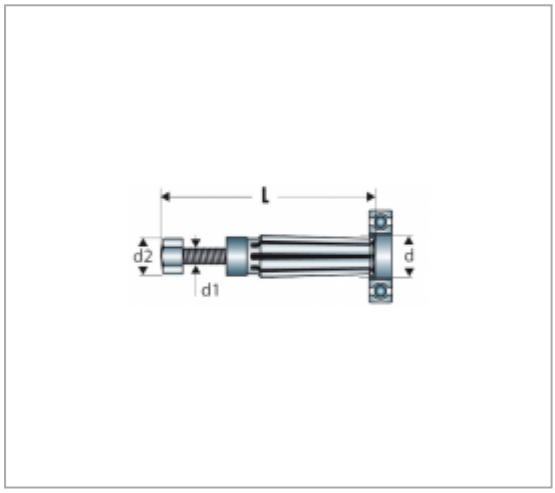

Description :

• High impact and screwing / unscrewing resistance. • Multiple flexible blades and hardly sensitive to distortion. • Easy to use.

Informations :

	U.49P2
d mini [mm]	8,5
d maxi [mm]	10
d mini - maxi [mm]	8,5 - 10,0
d1 [mm]	M8
d2 [mm]	12
L maxi [mm]	76
L [mm]	76
[g]	30

© FACOM 2019