BES 516-324-SA56-E5-C-S49
Ordering code: BES0356

Inductive sensor
M08x32,5 mm

DC, direct current
PNP/Normally open (NO)
Sn = 1,5 mm
Flush (shielded)

BALLUFF
sensors worldwide

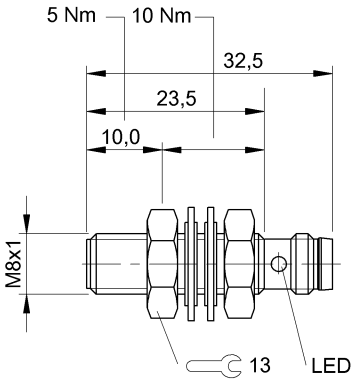

Characteristic data

Eff. switching distance Sr	1,5 mm
Tolerance Sr	±10 %
Assured operating distance Sa	1,2 mm
Hysteresis H max. (in % of Sr)	15 %
Repeat accur. R max. (% of Sr)	5 %
Ambient temperature	-25...70 °C
Temp. drift max. (% of Sr)	10%
Switching freq. f max.	1000 Hz
Ready delay tv max.	10 ms
Utilisation category	DC 13
Function indicator	Yes
Power-on indicator	No
Short-circuit protected	Yes
Degree of protection as per IEC 60529	IP67
Protected against polarity reversal	Yes
Protected against reverse connection	Yes

Electrical data

Operating voltage	
Rated operating voltage Ue DC	24 V
Ripple max. (% of Ue)	15 %
Voltage drop static max.	1,5 V
Rated insulation voltage Ui	75 DC V
Effective operating current Ie	200 mA
No-load current Io damped	10 mA
No-load current Io undamped	2 mA
Off-state current Ir max.	80 µA
Minimum operating current Im	0 mA
Rated short circuit current	100 A
Output resistance Ra	15.0k + LED
Load capacitance max. (at Ue)	1 µF
Principle of operation	Inductive

Mechanical data

Housing material	Stainless steel
Sensing surface material	PA 12
Tightening torque max.	5 Nm / 10 Nm
Mounting length	23,5 mm
Connection type	Connector
Connector type	M08x1-S49
Shock rating	Shock, half-sinus, 30 gn, 11ms
Vibration rating	55 Hz, 1 mm ampl., 3x30 min
Degree of contamination	3

Basic data

Basic standard	IEC 60947-5-2

Remarks

The sensor is functional again after the overload has been eliminated.
EMC: Surge immunity; external protection circuit required. Document 825345, Section 2.
With connector, e.g. BKS-S 49-… total length = switch length +12 mm.

CE

Definitions see main catalog

subject to change

Internet : www.balluff.com
Balluff Germany : +49 (0) 7158 173-0, 173-370
Balluff USA : 1-800-543-8390
Balluff China : +86 (0) 21-50 644131

BES 516-324-SA56-E5-C-S49
Ordering code: BES0356

Inductive sensor
M08x32,5 mm

DC, direct current
PNP/Normally open (NO)
Sn = 1,5 mm
Flush (shielded)

BALLUFF
sensors worldwide

