# Product data sheet

Specifications



## Photoelectric sensors XU, XUY, fork, pot +/-, 15X42mm, 12...24 VDC, M8

XUYFNEP40015

## Main

| | |
|---|---|
| **Range of product** | Telemecanique Photoelectric sensors XU |
| **Series name** | Application |
| **Electronic sensor type** | Photo-electric sensor |
| **Sensor name** | XUY |
| **Sensor design** | Fork |
| **Detection system** | Thru beam |
| **Emission** | Infrared LED, modulated |
| **Passage width** | 15 mm |
| **Passage depth** | 42 mm |
| **Material** | Metal/plastic |
| **Supply circuit type** | DC |
| **Wiring technique** | 4-wire |
| **Discrete output type** | PNP and NPN |
| **Discrete output function** | 1 NO or 1 NC programmable |
| **Electrical connection** | 1 male connector M8, 4 pins |
| **Product specific application** | Detection of labels<br>Detection on small conveyor<br>Detection on vibrating rail<br>Detection of reference marks<br>Detection of double sheet |
| **[Sn] nominal sensing distance** | 15 mm |

## Complementary

| | |
|---|---|
| **Enclosure material** | Painted aluminium and polyamide/glass |
| **Keypad type** | Green |
| **Minimum object diameter for detection** | 0.2 mm |
| **Type of output signal** | Discrete |
| **Output type** | Solid state |
| **Status LED** | Adjustment mode and keypad locking: 1 LED (red)<br>Output state: 1 LED (yellow) |
| **[Us] rated supply voltage** | 12...24 V DC with reverse polarity protection |

Disclaimer: This documentation is not intended as a substitute for and is not to be used for determining suitability or reliability of these products for specific user applications

| | |
|---|---|
| **Supply voltage limits** | 10…30 V DC |
| **Switching capacity in mA** | 100 mA (overload and short-circuit protection) |
| **Switching frequency** | 10 kHz |
| **Maximum voltage drop** | <2 V (closed state) |
| **Current consumption** | 40 mA no-load |
| **Load capacitance** | 330 nF |
| **Time response** | -20…20 µs |
| **Setting-up** | Sensitivity by numeric potentiometer |
| **Net weight** | 0.19 kg |

## Environment

| | |
|---|---|
| **Product certifications** | CE<br>cULus |
| **Ambient air temperature for operation** | -20…60 °C |
| **Ambient air temperature for storage** | -30…80 °C |
| **Immunity to ambient light** | 10000 lux natural light<br>5000 lux incandescent bulb |
| **Vibration resistance** | 7 gn, amplitude = +/- 0.75 mm (f = 10…55 Hz) conforming to IEC 60068-2-6 |
| **Shock resistance** | 30 gn (duration = 11 ms) conforming to IEC 60068-2-27 |
| **IP degree of protection** | IP65 conforming to IEC 60529 |

## Packing Units

| | |
|---|---|
| **Unit Type of Package 1** | PCE |
| **Number of Units in Package 1** | 1 |
| **Package 1 Weight** | 64.0 g |
| **Package 1 Height** | 2 cm |
| **Package 1 width** | 16.2 cm |
| **Package 1 Length** | 13 cm |
| **Unit Type of Package 2** | S01 |
| **Number of Units in Package 2** | 12 |
| **Package 2 Weight** | 969.0 g |
| **Package 2 Height** | 15 cm |
| **Package 2 width** | 15 cm |
| **Package 2 Length** | 40 cm |

## Offer Sustainability

| | |
|---|---|
| **REACh Regulation** | REACh Declaration |
| **EU RoHS Directive** | Pro-active compliance (Product out of EU RoHS legal scope)<br>EU RoHS Declaration |
| **Mercury free** | Yes |
| **RoHS exemption information** | Yes |
| **California proposition 65** | WARNING: This product can expose you to chemicals including: Diisononyl phthalate (DINP), which is known to the State of California to cause cancer, and Di-isodecyl phthalate (DIDP), which is known to the State of California to cause birth defects or other reproductive harm. For more information go to www.P65Warnings.ca.gov |

## Contractual warranty

| | |
|---|---|
| **Warranty** | 18 months |

# Product data sheet XUYFNEP40015

Dimensions Drawings

## Dimensions

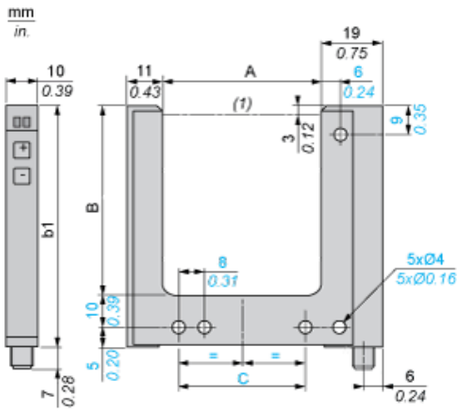


**(1)** Optical axis

**Dimensions in mm**

| A | B | b1 | C |
|---|---|---|---|
| 15 | 42 | 57 | 27 |

**Dimensions in in.**

| A | B | b1 | C |
|---|---|---|---|
| 0.59 | 1.65 | 2.24 | 1.06 |

## Wiring Schemes

### M8 Connector

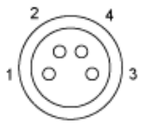


**1 :** BN: Brown
**2 :** WH: White
**3 :** BU: Blue
**4 :** BK: Black

### 4-Wire, PNP/NPN Outputs

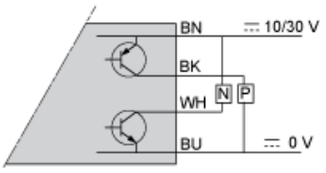


**BN :** Brown
**WH :** White
**BK :** Black
**BU :** Blue