# Precision pressure regulator, Series NL2-RGP

2024-04-23

**0821302515**

## Series NL2

The AVENTICS Series NL maintenance units are suitable for all areas: as individual components or as assembled maintenance units, for centralized or decentralized compressed air preparation, in compact or powerful versions, for use in high or low temperatures. This line offers a complete, customizable compressed air preparation technology. It includes an option to combine every component in the Series to achieve the desired function, making it possible to adjust the components precisely to the application requirements.




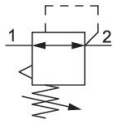


## Technical data

| | |
|---|---|
| Industry | Industrial |
| Function | Precision pressure regulator |
| Parts | Precision pressure regulator |
| Pressure gauge | without pressure gauge |
| Mounting orientation | Any |
| Regulator type | Diaphragm-type pressure regulator |
| Port | G 1/4 |
| Nominal flow Qn | 1500 l/min |
| Min. regulation range | 0.1 bar |
| Max. regulation range | 3 bar |
| Min. working pressure | 0.5 bar |
| Max. working pressure | 16 bar |
| Min. ambient temperature | -10 °C |
| Max. ambient temperature | 60 °C |
| Activation | Mechanical |
| Regulator function | with relieving air exhaust |
| Regulator type | Can be assembled into blocks |
| Pressure supply | single |
| Lock type | not lockable |

# Precision pressure regulator, Series NL2-RGP

2024-04-23

0821302515

| | |
|---|---|
| Max. internal air consumption $q_v$ | 2.6 l/min |
| Medium | Compressed air<br>Neutral gases |
| Recommended pre-filtering | 5 µm |
| Weight | 0.325 kg |

## Material

| | |
|---|---|
| Housing material | Die cast zinc |
| Material front plate | Acrylonitrile butadiene styrene |
| Seal material | Acrylonitrile butadiene rubber |
| Part No. | 0821302515 |

## Technical information

The pressure dew point must be at least 15 °C less than ambient and medium temperature and may not exceed 3 °C.

Nominal flow Qn with secondary pressure p2 = 6 bar at Δp = 1 bar

A change in the flow direction (from air supply on the left to air supply on the right) occurs by rotating installation by 180° about the vertical axis. Please see the operating instructions for further details.

## Dimensions

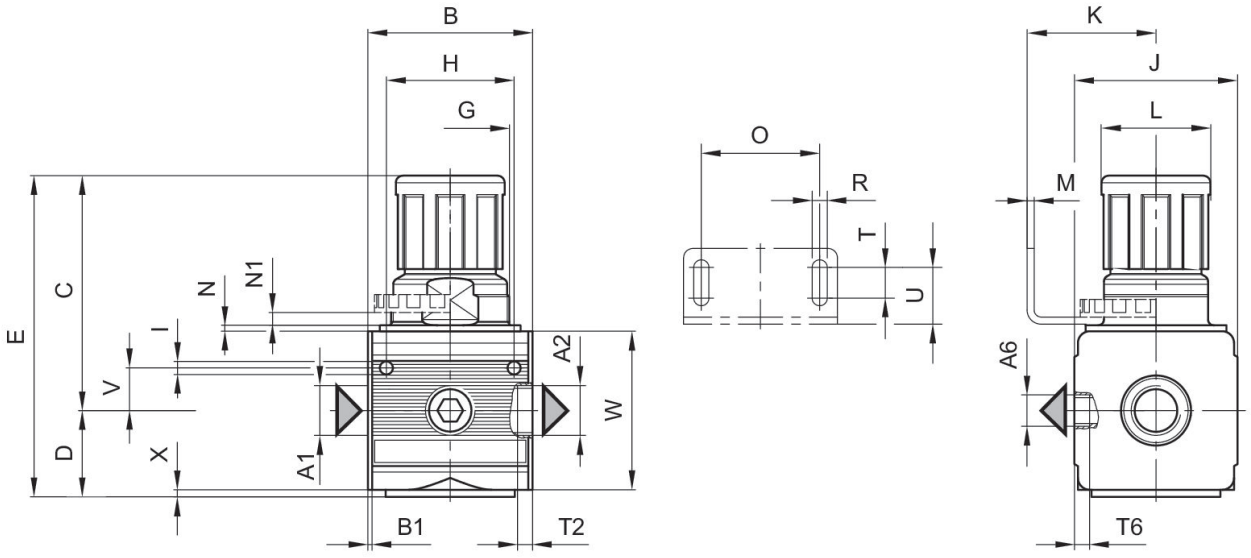


A1 = input A2 = output A6 = output

## Dimensions in mm

| Part No. | A1 | A2 | A6 | B | B1 | C | D | E | G |
|---|---|---|---|---|---|---|---|---|---|
| 0821302515 | G 1/4 | G 1/4 | G 1/4 | 48 | 1.5 | 67.5 | 27 | 94.5 | M30x1,5 |
| 0821302516 | G 1/4 | G 1/4 | G 1/4 | 48 | 1.5 | 67.5 | 27 | 94.5 | M30x1,5 |
| 0821302517 | G 1/4 | G 1/4 | G 1/4 | 48 | 1.5 | 67.5 | 27 | 94.5 | M30x1,5 |

| Part No. | H | I | J | K | L | M | N | N1 | O |
|---|---|---|---|---|---|---|---|---|---|
| 0821302515 | 36 | 4.4 | 47 | 43.5 | 28 | 3 | 3 | 3.5 | 38 |
| 0821302516 | 36 | 4.4 | 47 | 43.5 | 28 | 3 | 3 | 3.5 | 38 |
| 0821302517 | 36 | 4.4 | 47 | 43.5 | 28 | 3 | 3 | 3.5 | 38 |

| Part No. | R | T | T2 | T6 | U | V | W | X |
|---|---|---|---|---|---|---|---|---|
| 0821302515 | 5.4 | 8 | 9.5 | 7 | 18.5 | 12.3 | 52 | 1 |
| 0821302516 | 5.4 | 8 | 9.5 | 7 | 18.5 | 12.3 | 52 | 1 |
| 0821302517 | 5.4 | 8 | 9.5 | 7 | 18.5 | 12.3 | 52 | 1 |

## Pressure characteristics curve

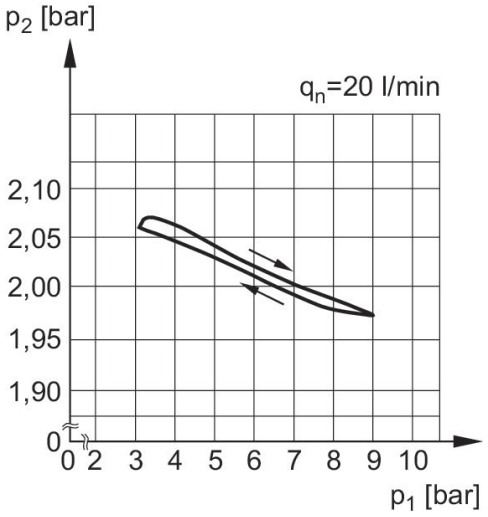


p1 = Working pressure
p2 = Secondary pressure
q = flow rate

## Flow rate characteristic, p2 = 0,05 - 7 bar

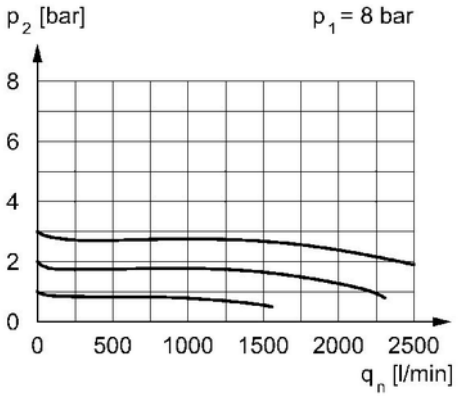


p1 = Working pressure p2 = Secondary pressure qn = Nominal flow
p2 = 0,1 - 3 bar

## Flow rate characteristic, p2 = 0,05 - 7 bar

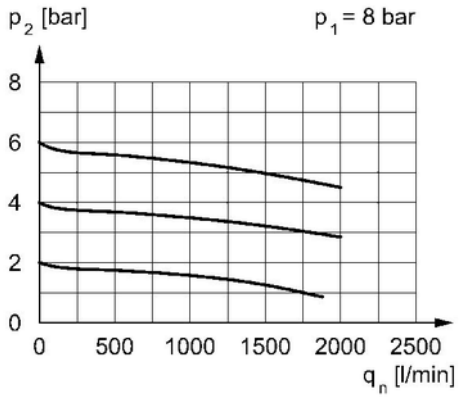


p1 = Working pressure p2 = Secondary pressure qn = Nominal flow
p2 = 0,5 - 10 bar

## Flow rate characteristic, p2 = 0,05 - 7 bar

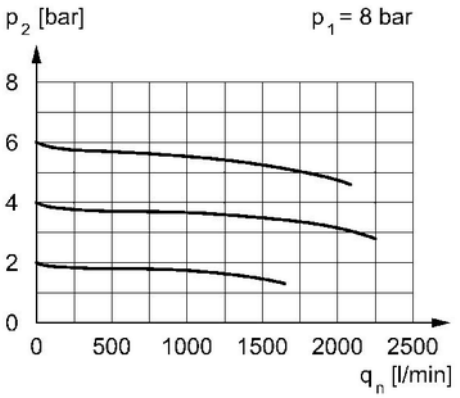


p1 = Working pressure p2 = Secondary pressure qn = Nominal flow
p2 = 0,2 - 6 bar