PS

4638.600
4638.800

4x 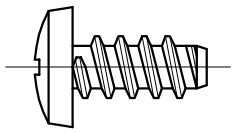 5,5x13

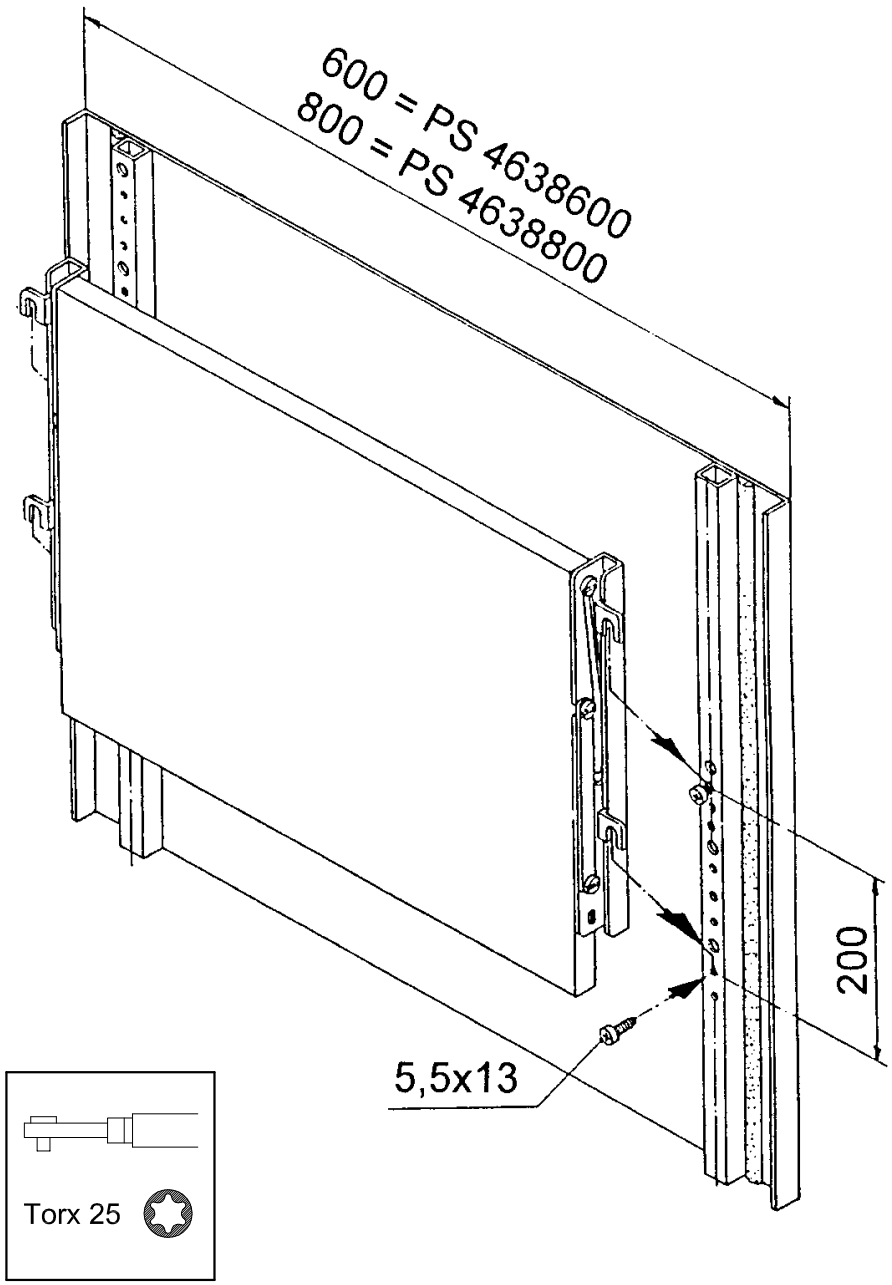

Zchng.-Nr. / No. of dwg. : A1362501PS Versandbeutel-Nr. / No. of accessory bag : 271942	Lieferanten-Nr. / No. of supplier :