# E74013

## AS-Interface flat cable

**Flat cable 500 meter EPDM bk**

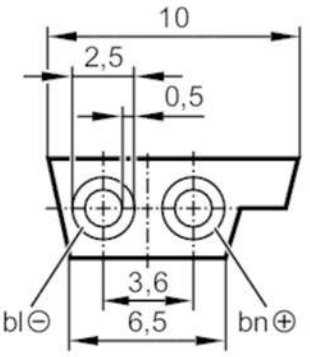


| | | |
|---|---|---|
| **Application** | | |
| Special feature | | Halogen-free |
| Application | | external 24 V power supply |
| **Electrical data** | | |
| Operating voltage | [V] | 24 DC |
| **Operating conditions** | | |
| Ambient temperature | [°C] | -40...85 |
| **Mechanical data** | | |
| Weight | [g] | 37500 |
| **Remarks** | | |
| Remarks | | 500 m form supplied: coiled |
| Pack quantity | | 500 m |
| **Electrical connection** | | |
| Cable: 500 m, EPDM, Halogen-free, black; 2 x 1.5 mm² | | |