Brand of NTN corporation

Technical data

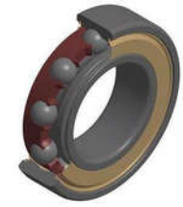

6006HVZZ

Single row deep groove ball bearings

TOPLINE deep groove ball bearing, radial contact, pressed polyamide cage, shields on both sides, for high speed applications

TOPLINE

VISUAL (S)

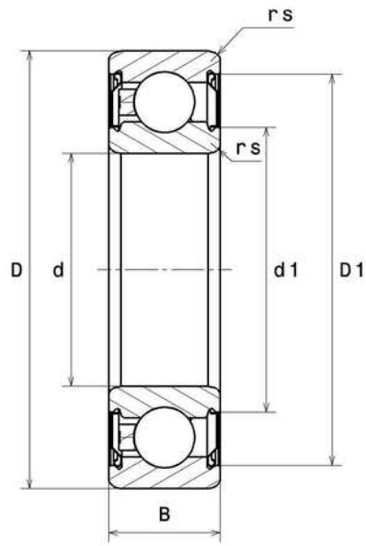

6006HVZZ

Single row deep groove ball bearings

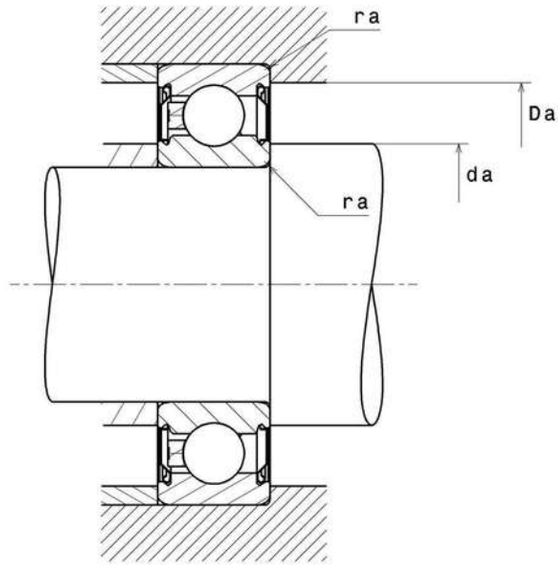

PRODUCT DEFINITION	
Brand	SNR
d - Internal diameter	30 mm
D - External diameter	55 mm
B - Bearing/Inner ring width	13 mm
d1 - External diameter inner ring	38,2 mm
D1 - Inner diameter outer ring	49,5 mm
rs - Min fillet radius	1 mm
Radial clearance class	C3
Mass	0,116 kg

PRODUCT PERFORMANCE	
C - Dynamic load	13900000 mN
C0 - Static load	8300000 mN
Cu - Fatigue limit load	380000 mN

6006HVZZ
Single row deep groove ball bearings

PRODUCT PERFORMANCE	
f0 - Coefficient	14.8
N lim - Mechanical Limit Speed	126000 °/s
Tmin - Min operating temperature	223,15 °K
Tmax - Max operating temperature	393,15 °K

BEARING FREQUENCIES	
BPFO - Over rolling frequency on outer ring (60 rpm)	4.58 Hz
BPFI - Over rolling frequency on inner (60 rpm)	6.42 Hz
BSF - Over rolling frequency on rolling element (60 rpm)	5.81 Hz
BRF - Rotational frequency – rolling element (60 rpm)	2.905 Hz
FTF - Rotational frequency - cage (60 rpm)	0.416 Hz

ABUTMENT	
da min - Min shoulder diameter IR	35 mm
da max - Max shoulder diameter IR	38,2 mm
Da max - Max shoulder diameter OR	50 mm
ra max - Max shaft & housing fillet radius	1 mm

6006HVZZ
Single row deep groove ball bearings

INDUSTRY CALCUL FACTORS

Equivalent dynamic radial load

P = X.Fr + Y.Fa

$\frac{f_0 F_a}{C_0}$	e	Fa / Fr ≤ e		Fa / Fr > e	
		X	Y	X	Y
0.172	0.19	1	0	0.56	2.3
0.345	0.22				1.99
0.689	0.26				1.71
1.03	0.28				1.55
1.38	0.3				1.45
2.07	0.34				1.31
3.45	0.38				1.15
5.17	0.42				1.04
6.89	0.44				1

Equivalent static radial load

Po = Xo.Fr + Yo.Fa

X_0	Y_0
0.6	0.5

For single or DT bearing arrangement :

If Po <Fr, then use Po = Fr