8B0W0045H000.001-1

1 General information

8B0W external braking resistors can be used to dissipate braking energy with B&R drive systems.

- Compact design
- High peak load capacity
- Intrinsically safe
- IP65 protection
- Optimally suited for B&R drive systems

2 Order data

Order number	Short description	Figure
	Braking resistors	
8B0W0045H000.001-1	Braking resistor, 450 W, 50 R, IP65, terminals	

Table 1: 8B0W0045H000.001-1 - Order data

3 Technical data

Order number	8B0W0045H000.001-1
General information	
RoHS-compliant	Yes
Cooling and mounting type	Wall mounting
Certifications	
CE	Yes
UKCA	Yes
KC	Yes
Braking resistor	
Continuous power depending on mounting orientation	
Standing horizontally	388 W
Hanging vertically	424 W
Reduction of continuous power depending on ambient temperature	7.5 W/K (starting at 40°C)
Ohmic resistance	50 Ω ±10%
Max. operating voltage	850 VDC
Insulation voltage type test	4,000 VAC
Intrinsically safe	Yes (for operating voltages ≥500 VDC)
Variant	
RB1, RB2	Terminals with tension spring technology
PE	M4 threaded bolt
Shield connection	Yes, on the connection box via high-strength cable gland
Terminal connection cross section	
Flexible and fine-stranded wires	
With wire end sleeves	1.5 to 10 mm²
Approbation data	
UL/C-UL-US	24 to 6 AWG
CSA	22 to 6 AWG
Terminal cable outer cross section dimension of attachment cable	9 to 16.6 mm

Table 2: 8B0W0045H000.001-1 - Technical data

Order number	8B0W0045H000.001-1
Temperature model data	
Thermal resistance between braking resistor and environment depending on mounting orientation	
Standing horizontally	1.657 K/W
Hanging vertically	1.517 K/W
Thermal capacity	30.88 Ws/K
Max. permissible overtemperature	683°C
Operating conditions	
Permissible mounting orientations	
Standing horizontally	Yes
Hanging vertically	
Connection box, bottom	Yes
Connection box, top	No
Degree of protection per EN 60529	
Standing horizontally	IP65
Hanging vertically	
Connection box, bottom	IP65
Connection box, top	-
Ambient conditions	
Temperature	
Operation	-40 to 90°C
Relative humidity	
Operation	5 to 95%
Mechanical properties	
Dimensions	
Width	124 mm
Height	118 mm
Depth	355 mm
Weight	2.4 kg

Table 2: 8B0W0045H000.001-1 - Technical data

4 8B0W00xxH000.001-1 Rev. C0 - Dimension diagram and installation dimensions

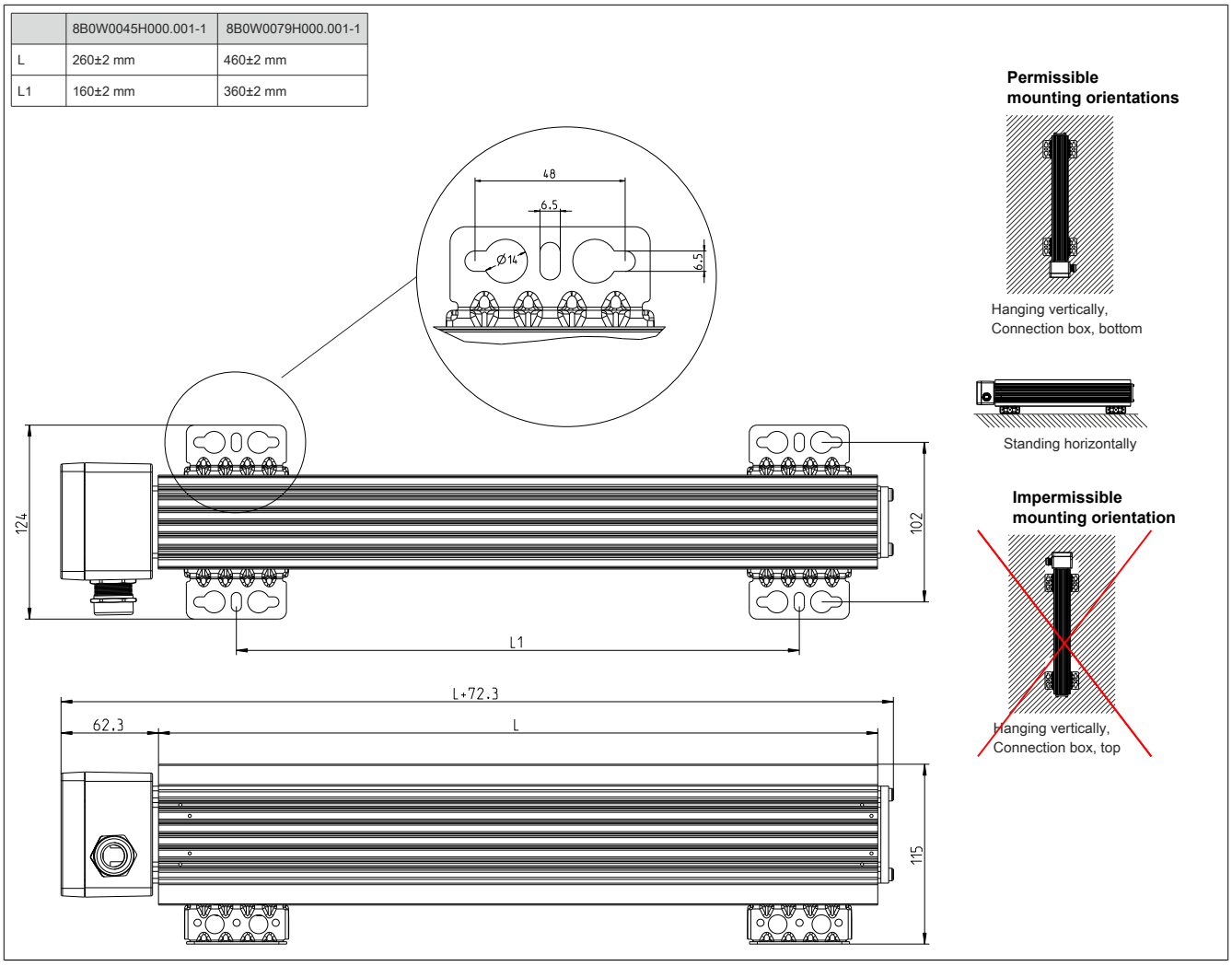

Figure 1: Dimension diagram and installation dimensions

Warning!

External braking resistors 8B0W can have very high surface temperatures both during operation and after being switched off!

5 Dimension diagram and installation dimensions starting with Rev.D0

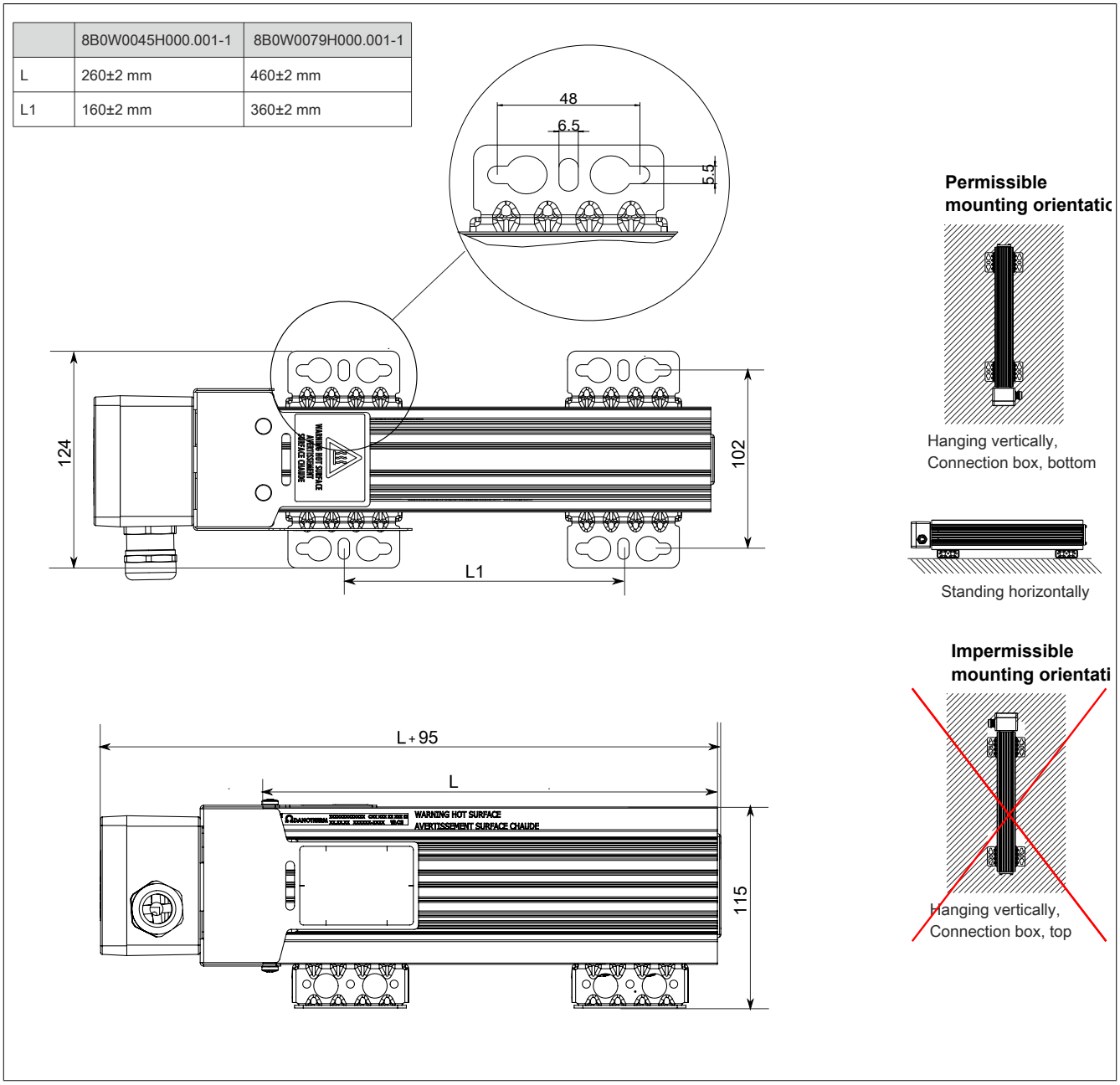

Figure 2: Dimension diagram and installation dimensions

Warning!

External braking resistors 8B0W can have very high surface temperatures both during operation and after being switched off!

6 Wiring

6.1 8B0W00xxH.000.001-1 - Pinout overview

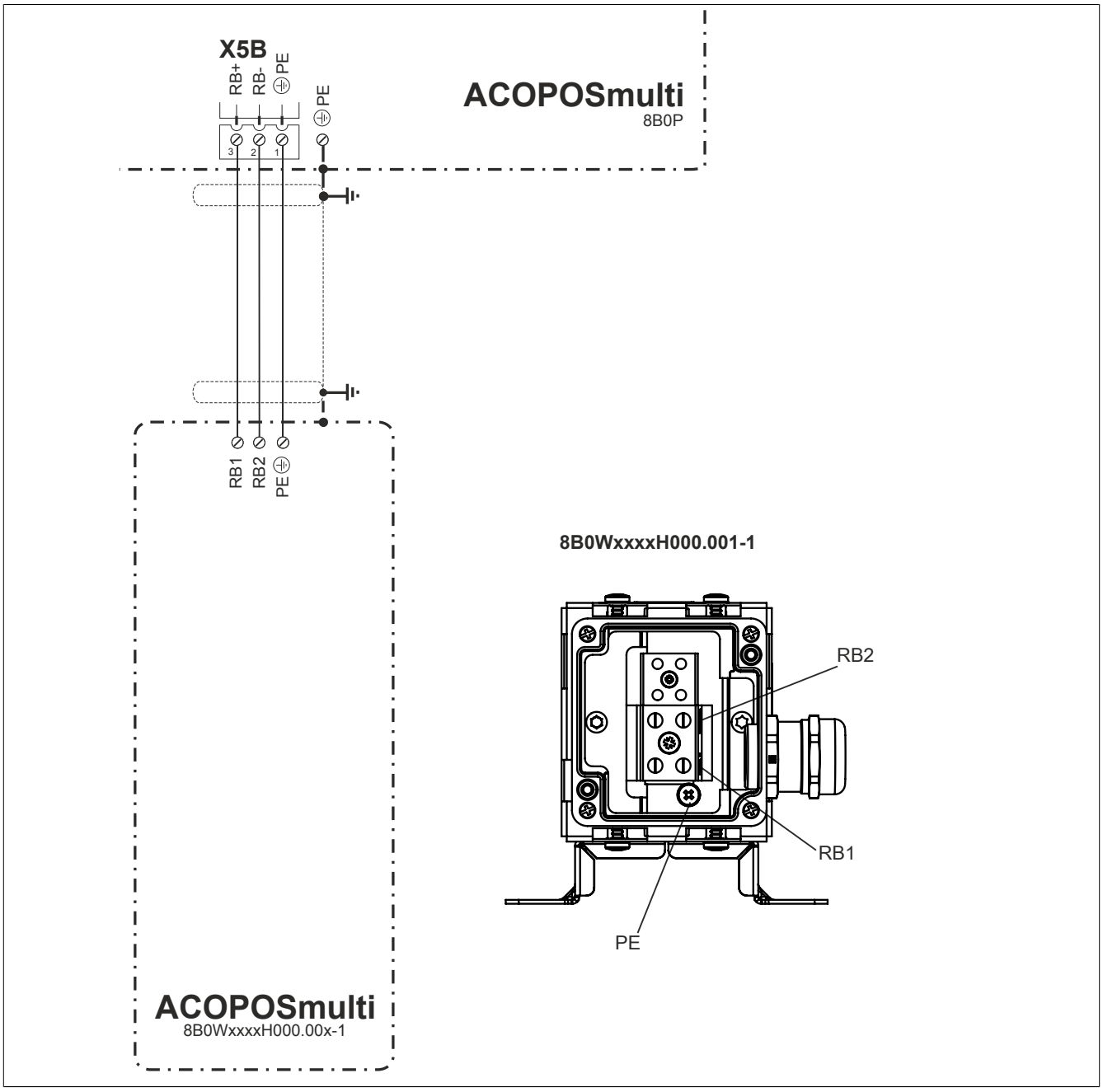

Figure 3: Pinout overview

Information:

8B0W external braking resistors must be wired with connection cables that are suitable for maximum line temperatures >90°C.

Wiring must be carried out with a shielded cable!