stay connected

MQ15-X- Power male receptacle front mount

PVC 6x2,5 UL/CSA 0,50m

MQ15
Male
6-pole
Flange Connectors
Quick connection technology

Plastic housings with good resistance against chemicals and oils. The resistance to aggressive media should be individually tested for your application. Further details on request. Further cable lengths on request.

Link to Product

Illustration



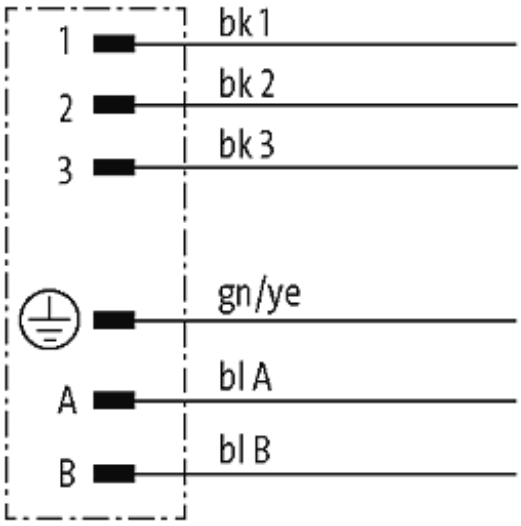

The information in this brochure has been compiled with the utmost care.
Liability for the correctness completeness and topicality of the information is restricted to gross negligence. Version: 02/16

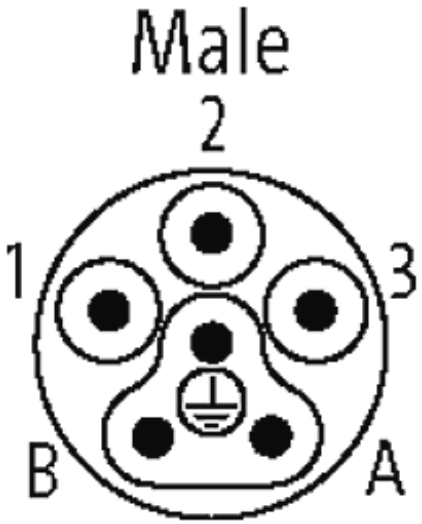

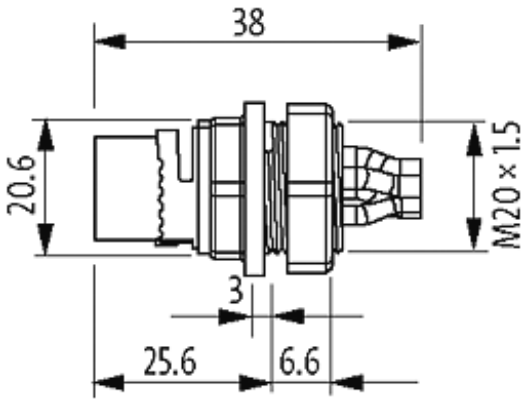

Product may differ from Image

Form	
Form	P8181
Technical Data	
Operating voltage	max. 600 V AC/DC
Operating voltage (Signal)	max. 63 V AC/DC (A, B)
Operating current per contact	max. 16 A
Operating current per contact (Signal)	max. 10 A (A, B)
Locking of ports	Quick connection, 1/4 turn
Protection	IP67 inserted and tightened (EN 60529)
Locking material	Polyamide
Cables	
Cable number	P80
No./diameter of wires	6 × 2.5 mm²
Wire isolation	PP (bk num, gnye)
C-track properties	5 Mio.
Torsion	± 15°/m
Shore hardness outer jacket	80 ± 5A
Outer Ø	approx. 3.6 mm

The information in this brochure has been compiled with the utmost care.
Liability for the correctness completeness and topicality of the information is restricted to gross negligence. Version: 02/16

Bend radius (fixed)	5 × outer Ø
Bend radius (moving)	10 × outer Ø
Temperature range (fixed)	-40...+80 °C
Temperature range (mobile)	-20...+60 °C

Commercial data

customs tariff number	85444290
minimum order quantity	1

The information in this brochure has been compiled with the utmost care.
Liability for the correctness completeness and topicality of the information is restricted to gross negligence. Version: 02/16