Instruction manual

StarTech.com

Hard-to-find made easy®

9U portable server rack with handles and casters -23 in. depth

RK960CP



*actual product may vary from photos

DE: Bedienungsanleitung - de.startech.com
FR: Guide de l'utilisateur - fr.startech.com
ES: Guía del usuario - es.startech.com
IT: Guida per l'uso - it.startech.com
NL: Gebruiksaanwijzing - nl.startech.com
PT: Guia do usuário - pt.startech.com

For the latest information, technical specifications, and support for this product, please visit www.startech.com/RK960CP.

Manual Revision: 05/08/2015

Use of Trademarks, Registered Trademarks, and other Protected Names and Symbols

This manual may make reference to trademarks, registered trademarks, and other protected names and/or symbols of third-party companies not related in any way to StarTech.com. Where they occur these references are for illustrative purposes only and do not represent an endorsement of a product or service by StarTech.com, or an endorsement of the product(s) to which this manual applies by the third-party company in question. Regardless of any direct acknowledgement elsewhere in the body of this document, StarTech.com hereby acknowledges that all trademarks, registered trademarks, service marks, and other protected names and/or symbols contained in this manual and related documents are the property of their respective holders.

Table of Contents

Packaging contents **2**

Installation **3**

Assemble the server rack 3

Technical support **5**

Warranty information **5**

Packaging contents

ID	Item	Quantity
	Instruction manual	1
	Rack components	
1	Side panel with handles	2
2	Top panel	1
3	Bottom panel with grommet	1
4	Plastic corner caps	8
	Rack assembly hardware	
5	M5 (10 mm) Phillips flat-head screw	32
6	M3 (8 mm) Phillips flat-head screw	24
	Rack assembly tools	
7	Phillips screwdriver	1
8	Phillips bit	1

ID	Item	Quantity
	Casters	
9	2.5 in. caster	2
10	2.5 in. brake caster	2
11	M5 (15 mm) bracket screw	16
	Mounting equipment	
12	M5 (12 mm) panel screw	30
13	M5 cage nut	30
14	Cage nut tool	1

Installation

Assemble the server rack

Make sure that you have all of the packaging contents before you begin to assemble the server rack.

1. Use the M5 (10 mm) Phillips flat-head screws (**#5**) and the Phillips screwdriver to attach one of the side panels (**#1**) to the long side of the bottom panel (**#3**).
2. Repeat step 1 for the second side panel (**#1**).

Note: When you attach the side panels, make sure that the handle is facing the right way up before you attach the sides to the bottom panel.

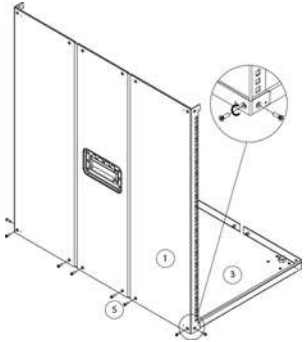

3. Line up the plastic corner caps (**#4**) with the holes on the corners of the panels. Use the M3 (8 mm) flat-head Phillips screws (**#6**) to attach the corner caps (**#4**) to each of the eight corners on the rack.

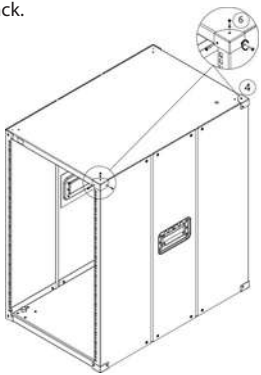

4. Turn the rack on its side and use the bracket screws (**#11**) to attach the casters (**#9**) (**#10**) to your rack.

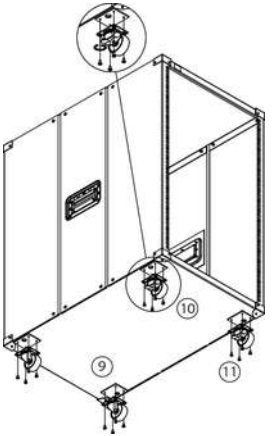

Warning! To prevent bodily injury, please make sure that the rack is installed in a structurally sound environment with a level floor, and that all of the hardware has been assembled securely and checked for stability before loading equipment. When installing equipment into the rack, start from the bottom of the rack first and move upwards, keeping the heaviest equipment at the bottom to avoid a situation where the rack becomes top heavy.

Technical support

StarTech.com's lifetime technical support is an integral part of our commitment to provide industry-leading solutions. If you ever need help with your product, visit **www.startech.com/support** and access our comprehensive selection of online tools, documentation, and downloads.

For the latest drivers/software, please visit **www.startech.com/downloads**

Warranty information

This product is backed by a two-year warranty.

StarTech.com warrants its products against defects in materials and workmanship for the periods noted, following the initial date of purchase. During this period, the products may be returned for repair, or replacement with equivalent products at our discretion. The warranty covers parts and labor costs only. StarTech.com does not warrant its products from defects or damages arising from misuse, abuse, alteration, or normal wear and tear.

Limitation of Liability

In no event shall the liability of StarTech.com Ltd. and StarTech.com USA LLP (or their officers, directors, employees or agents) for any damages (whether direct or indirect, special, punitive, incidental, consequential, or otherwise), loss of profits, loss of business, or any pecuniary loss, arising out of or related to the use of the product exceed the actual price paid for the product. Some states do not allow the exclusion or limitation of incidental or consequential damages. If such laws apply, the limitations or exclusions contained in this statement may not apply to you.

StarTech.com

Hard-to-find made easy®

Hard-to-find made easy. At StarTech.com, that isn't a slogan. It's a promise.

StarTech.com is your one-stop source for every connectivity part you need. From the latest technology to legacy products — and all the parts that bridge the old and new — we can help you find the parts that connect your solutions.

We make it easy to locate the parts, and we quickly deliver them wherever they need to go. Just talk to one of our tech advisors or visit our website. You'll be connected to the products you need in no time.

Visit www.startech.com for complete information on all StarTech.com products and to access exclusive resources and time-saving tools.

StarTech.com is an ISO 9001 Registered manufacturer of connectivity and technology parts. StarTech.com was founded in 1985 and has operations in the United States, Canada, the United Kingdom and Taiwan servicing a worldwide market.