DRF Series - Medium - Economy type - Outer hose: PU/PVC - Inner: PU polyester base



Description						
Reference	**ID/OD (mm)**	**Length (m)**	**Coupler**	**Fixed inlet (mm)**	**Flow rate (l/min)**	**Weight (kg)**
DRF 0812BS	8 x 12	12	BSI 06	8 x 12	500	6
DRF 0815BS	8 x 12	15	BSI 06	8 x 12	350	7
DRF 1010BS	10 x 14	10	BSI 06	10 x 14	750	5.7
DRF 1012BS	10 x 14	12	BSI 06	10 x 14	800	6.8
DRF 1015BS	10 x 14	15	BSI 06	10 x 14	800	7.2
DRF 0812ES	8 x 12	12	ESI 07	8 x 12	500	6
DRF 0815ES	8 x 12	15	ESI 07	8 x 12	350	7

Prevost UK LTD - Unit G, Tower Business Park - Commercial Road - BB3 OFJ Darwen - Lancashire - United kingdom
Phone. (+44) 01254 873 389 -sales@prevost-ltd.co.uk - www.prevost.eu

Reference	ID/OD(mm)	Length (m)	Coupler	Fixed inlet (mm)	Flow rate (l/min)	Weight(kg)
DRF 1010ES	10 x 14	10	ESI 07	10 x 14	900	5.7
DRF 1012ES	10 x 14	12	ESI 07	10 x 14	800	6.8
DRF 1015ES	10 x 14	15	ESI 07	10x14	800	7.2
DRF 0812IS	8 x 12	12	ISI 06	8 x 12	500	6
DRF 0815IS	8 x 12	15	ISI 06	8 x 12	350	7
DRF 1010IS	10 x 14	10	ISI 06	10 x 14	833	5.7
DRF 1012IS	10 x 14	12	ISI 06	10 x 14	800	6.8
DRF 1015IS	10 x 14	15	ISI 06	10x14	800	7.2
DRF 0812CS	8 x 12	12	CSI 06	8 x 12	500	6
DRF 0815CS	8 x 12	15	CSI 06	8 X 12	350	7
DRF 1010CS	10 x 14	10	CSI 06	10 x 14	833	5.7
DRF 1012CS	10 x 14	12	CSI 06	10 x 14	800	6.8

Prevost UK LTD - Unit G, Tower Business Park - Commercial Road - BB3 OFJ Darwen - Lancashire - United kingdom
Phone. (+44) 01254 873 389 -sales@prevost-ltd.co.uk - www.prevost.eu

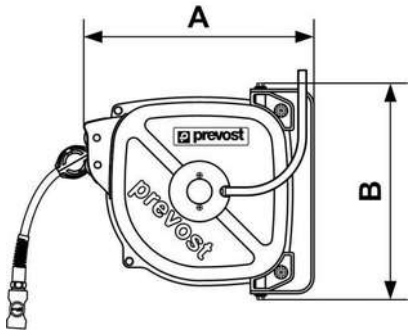

Dimensions		
Reference	**A mm**	**B mm**
DRF 0812BS	340	302
DRF 0815BS	340	337
DRF 1010BS	340	302
DRF 1012BS	370	337
DRF 1015BS	370	337
DRF 0812ES	340	302
DRF 0815ES	370	337
DRF 1010ES	340	302
DRF 1012ES	370	337

Prevost UK LTD - Unit G, Tower Business Park - Commercial Road - BB3 OFJ Darwen - Lancashire - United kingdom
Phone. (+44) 01254 873 389 -sales@prevost-ltd.co.uk - www.prevost.eu

Reference	A mm	B mm
DRF 1015ES	370	337
DRF 0812IS	340	302
DRF 0815IS	370	337
DRF 1010IS	340	302
DRF 1012IS	370	337
DRF 1015IS	370	337
DRF 0812CS	340	302
DRF 0815CS	370	337
DRF 1010CS	340	302
DRF 1012CS	370	337