Guide cylinders, Series GPC-BV

0822063101

AVENTICS Series SH

The AVENTICS Series GPC is distinguished by high side load capacity and torsion protection. The drive and guide rods are robust and precise with high torque and transverse force absorption.





Technical data

Industry	Industrial
Piston Ø	25 mm
Piston rod Ø	10 mm
Stroke	20 mm
Functional principle	Double-acting
Bearing type	ball bearing
Magnetic piston	with magnetic piston
Cushioning	elastic
Min. working pressure	1.5 bar
Max. working pressure	10 bar
Min. ambient temperature	-10 °C
Min. ambient temperature	14 °F
Max. ambient temperature	70 °C
Max. ambient temperature	158 °F
Min. oil content of compressed air	0 mg/m³
Max. oil content of compressed air	5 mg/m³
Port	G 1/8
Retracting piston force	260 N
Retracting piston force	58.45 lbf

Extracting piston force	309 N
Extracting piston force	69.46 lbf
Max. speed	0.8 m/s
Impact energy	0.35 J
Medium	Compressed air
Max. particle size	50 µm
Pressure for determining piston forces	6,3 bar
Weight	0.93 kg

Material

Housing material	Aluminum
Surface housing	anodized
Seal material	Polyurethane
Material front plate	Steel, chrome-plated
Surface front plate	galvanized
Material guide rods	Steel, chrome-plated
Surface guide rods	hardened
Bearing material	Steel, chrome-plated
Surface bearing	hardened
Material piston rod	Stainless Steel
Part No.	0822063101

Technical information

Note: Only the Ø10 variants fits to sensor series ST4. The sensor series ST6 and SN3 can be used for all other Ø variants.

The pressure dew point must be at least 15 °C less than ambient and medium temperature and may not exceed 3 °C.

The oil content of compressed air must remain constant during the life cycle.

Use only the approved oils from AVENTICS. Further information can be found in the “Technical information” document (available in https://www.emerson.com/en-us/support).

Dimensions

Guide cylinders, Series GPC-BV

0822063101

Ø 25 ... 100

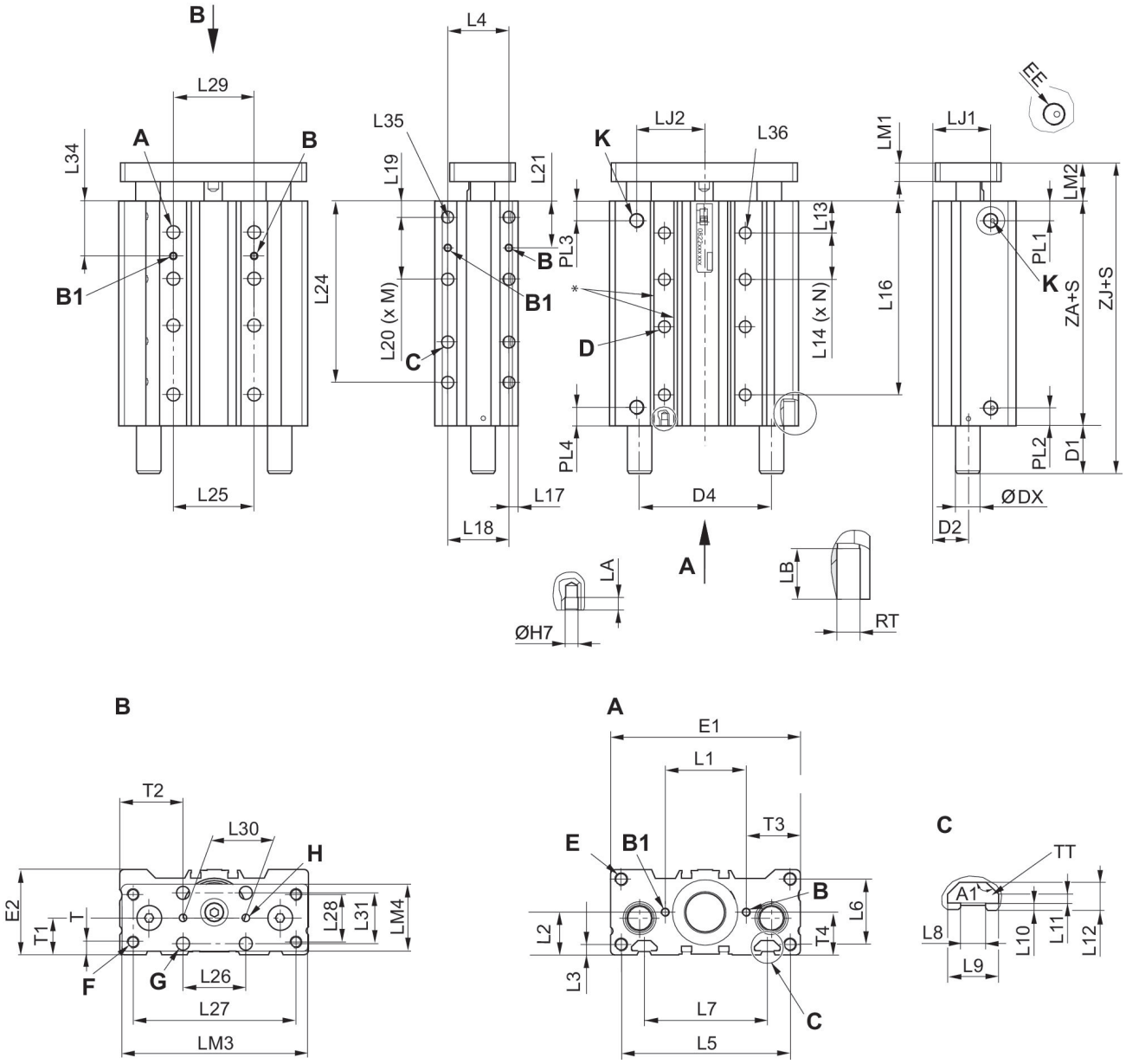

* Suitable for screws according to ISO 4762
S = stroke
Note: Only the Ø10 variants fits to sensor series ST4. The sensor series ST6 and SN3 can be used for all other Ø variants.

Piston Ø	S=10 L36	S=20 L36	S=25 L36	S=30 L36	S=40 L36	S=50 L36	S=75 L36	S=100 L36	S=125 L36
25	4	4	4	4	6	6	8	10	10
32	4	4	4	4	4	6	6	8	10
40	4	4	4	4	4	4	6	6	8
50	4	4	4	4	4	4	4	6	8
63	4	4	4	4	4	4	4	6	6

Piston Ø	S=160 L36	S=200 L36	S=10 ZJ	S=20 ZJ	S=25 ZJ	S=30 ZJ	S=40 ZJ	S=50 ZJ	S=75 ZJ
25	10	10	76.5	76.5	76.5	76.5	86.5	86.5	86.5
32	10	10	-	-	85	-	-	85	100
40	10	10	-	-	85	-	-	85	100.5
50	8	10	-	-	89.5	-	-	89.5	115.5
63	8	10	-	-	89.5	-	-	89.5	115.5

Piston Ø	S=100 ZJ	S=125 ZJ	S=160 ZJ	S=200 ZJ
25	86.5	104.5	104.5	104.5
32	100	116	116	116
40	100.5	116.5	116.5	116.5
50	115.5	133.5	133.5	133.5
63	115.5	133.5	133.5	133.5

Piston Ø	S=10 L34	S=20 L34	S=25 L34	S=30 L34	S=40 L34	S=50 L34	S=75 L34	S=100 L34	S=125 L34
25	26	29	29	29	29	29	29	29	29
32	35.5	35.5	35.5	37	37	37	37	37	37
40	35	35	35	40	40	40	40	40	40
50	35.5	35.5	35.5	47	47	47	47	47	47
63	38	38	38	38	38	38	54	54	54

Piston Ø	S=160 L34	S=200 L34	S=10 L35	S=20 L35	S=25 L35	S=30 L35	S=40 L35	S=50 L35	S=75 L35
25	29	29	4	4	4	4	6	6	8
32	37	37	4	4	4	4	4	4	6
40	40	40	4	4	4	4	4	4	6
50	47	47	4	4	4	4	4	4	4
63	54	54	4	4	4	4	4	4	4

Piston Ø	S=100 L35	S=125 L35	S=160 L35	S=200 L35
25	8	10	10	10
32	8	8	10	10
40	6	6	8	10
50	6	6	8	8
63	4	6	6	8

S = stroke

Piston Ø	S=10 M	S=20 M	S=25 M	S=30 M	S=40 M	S=50 M	S=75 M	S=100 M	S=125 M
25	1	1	1	1	1	1	2	3	3
32	-	-	1	1	1	1	2	2	3
40	-	-	1	1	1	1	1	2	2
50	-	-	1	1	1	1	1	1	2
63	-	-	1	1	1	1	1	1	1

Piston Ø	S=160 M	S=200 M	S=40 L24	S=50 L24	S=75 L24	S=100 L24	S=125 L24	S=160 L24	S=200 L24
25	3	3	60	70	95	-	145	180	220
32	3	3	-	-	-	122.5	-	182.5	222.5
40	3	3	-	-	91	-	-	-	216
50	2	3	-	-	-	116	-	176	-
63	2	2	-	-	-	-	140	-	217

S = stroke

Piston Ø	S=20 L20	S=25 L20	S=30 L20	S=40 L20	S=50 L20	S=75 L20	S=100 L20	S=125 L20	S=160 L20
25	22	32	32	32	32	32	32	32	32
32	35	35	42	42	42	42	42	42	42
40	30	30	53	53	53	53	53	53	53
50	30	30	30	30	30	63	63	63	63
63	30	30	30	30	30	30	30	30	30

Piston Ø	S=200 L20	S=20 L21	S=25 L21	S=30 L21	S=40 L21	S=50 L21	S=75 L21	S=100 L21	S=125 L21
25	32	19	24	24	24	24	24	24	24
32	42	27.5	27.5	31	31	31	31	31	31
40	53	25	25	36.5	36.5	36.5	36.5	36.5	36.5
50	63	27	27	27	27	27	43.5	43.5	43.5
63	30	27	27	27	27	27	52	52	52

Piston Ø	S=160 L21	S=200 L21
25	24	24
32	31	31
40	36.5	36.5
50	43.5	43.5
63	52	52

S = stroke

Piston Ø	S=10 N	S=20 N	S=25 N	S=30 N	S=40 N	S=50 N	S=75 N	S=100 N	S=125 N
25	1	1	1	1	1	2	3	3	3
32	-	-	1	1	1	1	2	3	3
40	-	-	1	1	1	1	2	2	3
50	-	-	1	1	1	1	1	2	2
63	-	-	1	1	1	1	1	1	2

Piston Ø	S=160 N	S=200 N	S=40 L16	S=50 L16	S=100 L16	S=125 L16	S=160 L16	S=200 L16
25	3	3	65.5	-	12.5	150.5	185.5	225.5
32	3	3	-	76	-	151	186	226
40	3	3	-	-	-	-	184	224
50	3	3	-	-	-	148	-	223
63	2	3	-	-	127	-	187	-

Piston Ø	S=10 D1	S=20 D1	S=25 D1	S=30 D1	S=40 D1	S=50 D1	S=75 D1	S=100 D1	S=125 D1
25	19	19	19	19	29	29	29	29	47
32	-	-	20	20	20	20	35	35	51
40	-	-	21.5	21.5	21.5	21.5	37	37	53
50	-	-	20	20	20	20	46	46	64
63	-	-	14	14	14	14	40	40	58

Piston Ø	S=150 D1	S=160 D1	S=200 D1	S=10 L14	S=20 L14	S=25 L14	S=30 L14	S=40 L14	S=50 L14
25	47	47	47	25	25	25	25	25	25
32	51	51	51	30	30	30	33	33	33
40	53	53	53	30	30	30	40	40	40
50	64	64	64	25	25	25	48	48	48
63	58	58	58	28	28	28	28	28	28

Piston Ø	S=75 L14	S=100 L14	S=125 L14	S=160 L14	S=200 L14
25	25	25	25	25	25
32	33	33	33	33	33
40	40	40	40	40	40
50	48	48	48	48	48
63	60	60	60	60	60

S = stroke

Piston Ø	A RTxLB	A1	B ØdxLA	B1 ØdxD	C RTxLB	D Ø 1)	D2	D4	DX
25	M6x10	135°	4x4	4x5	M6x10	5.5	18	59	12
32	M8x14	135°	4x4	4x5	M8x14	7.4	23	75.6	16
40	M8x14	135°	4x4	4x5	M8x14	7.4	23	86	16
50	M10x20	135°	5x5	5x6	M10x20	9.3	27.5	104	20
63	M10x20	135°	5x5	5x6	M10x20	9.3	35	124	20

Piston Ø	E RTxLB	E1	E2	F Ø 1)	G Ø 2)	H Ø 2)	K EE	L1	L2
25	M6x12	95	43	M6	6.5	4H8	G 1/8	35 ±0,1	20.5
32	M6x12	114	48.5	M8	6.5	4H8	G 1/8	44 ±0,1	24
40	M8x16	124	54.5	M8	8.5	4H8	G 1/8	53 ±0,15	27
50	M8x16	148	64	M8	8.5	4H8	G 1/4	66 ±0,15	32
63	M10x20	162	78.5	M10	10.5	5H8	G 1/4	84 ±0,15	39

Piston Ø	L3	L4	L5	L6	L7	L8	L9	L10	L11
25	4.5	25 ±0,1	85	34	52	6.15	12	1.5	1.5
32	5	33 ±0,1	105	26	70	8.2	16.7	2.2	2.8
40	6	40 ±0,15	110	42	80	8.2	16.7	2.2	2.8
50	8	48 ±0,15	133	34.5	93	8.2	16.7	2.2	2.8
63	8	60 ±0,15	147	62	112	10.2	20.3	6	6

Piston Ø	L12	L13	L15	L17	L18	L19	L22	L25	L26
25	5.5	16.5	25	5.5	25	8	32	32	30
32	9	20.5	33	6.5	33	10	42	42	32
40	9	20	40	6	40	10	53	53	42
50	9	23	48	7.5	48	12	63	63	53
63	16	24	60	11	60	12	80	80	63

Piston Ø	L27	L28	L29	L30	L31	LJ1	LJ2	LM1	LM2
25	81	23	32 ±0,1	30 ±0,2	24	29.6	32	10	15.5
32	97	30	42 ±0,1	32 ±0,2	25	40	40.5	12	18.5
40	107	30	53 ±0,15	42 ±0,2	32.5	37.8	44	12	19.5
50	134	40	63 ±0,15	53 ±0,2	40	54.5	50.5	15	23.5
63	140	48	80 ±0,15	63 ±0,2	48	57	59	15	24

Piston Ø	LM3	LM4	PL1	PL2	PL3	PL4	T	T1	T2
25	93	33	11	11	11	11	6.5	18 ±0,4	32,5 ±0,4
32	112	43	13.5	13.5	13.5	13.5	8	23 ±0,4	41 ±0,4
40	122	43	12	12	12	12	8	23 ±0,4	41 ±0,4
50	146	52	13	13	13	13	7.5	27,5 ±0,4	47,5 ±0,4
63	160	67	13.7	13.7	13.7	13.7	11	35 ±0,4	49,5 ±0,5

Piston Ø	T3	T4	TT	ZA
25	30 ±0,05	20,5 ±0,05	N6	42 3)
32	35 ±0,05	24 ±0,05	N8	46.5
40	35,5 ±0,1	27 ±0,1	N8	44
50	41 ±0,1	32 ±0,1	N8	46
63	39 ±0,1	39 ±0,1	N10	51

S = stroke
To determine the cylinder length (ZA) for intermediate strokes (i.e. stroke 10 with dia. 40), the next available standard stroke size must be used
1) Through hole with thread
2) through-hole
3) For stroke 10/150, ZA = 52, for stroke 25, ZA = 47
Two holes C-C 10 mm.

Permissible static side load F [N] at distance L

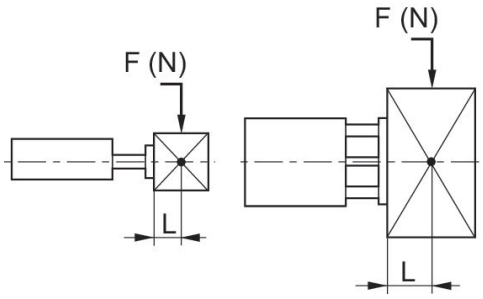

Permissible static moment M [Nm]

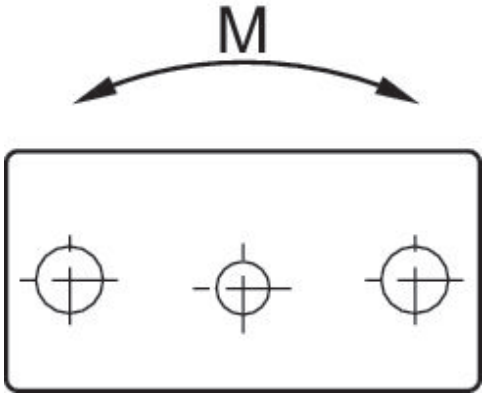

Permissible static side force F [N]

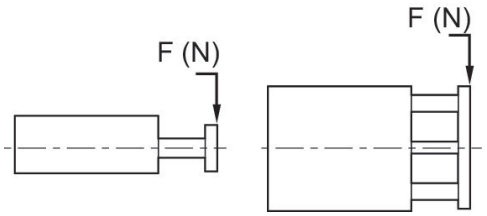

Permissible static moment M [Nm]

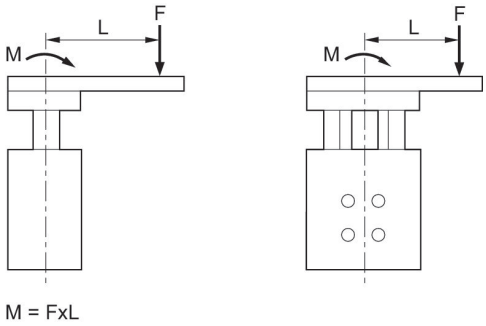

M = FxL

GPC combinations

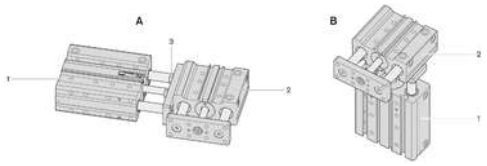

1) Cylinder 1
2) Cylinder 2
3) Screw

Overview drawing

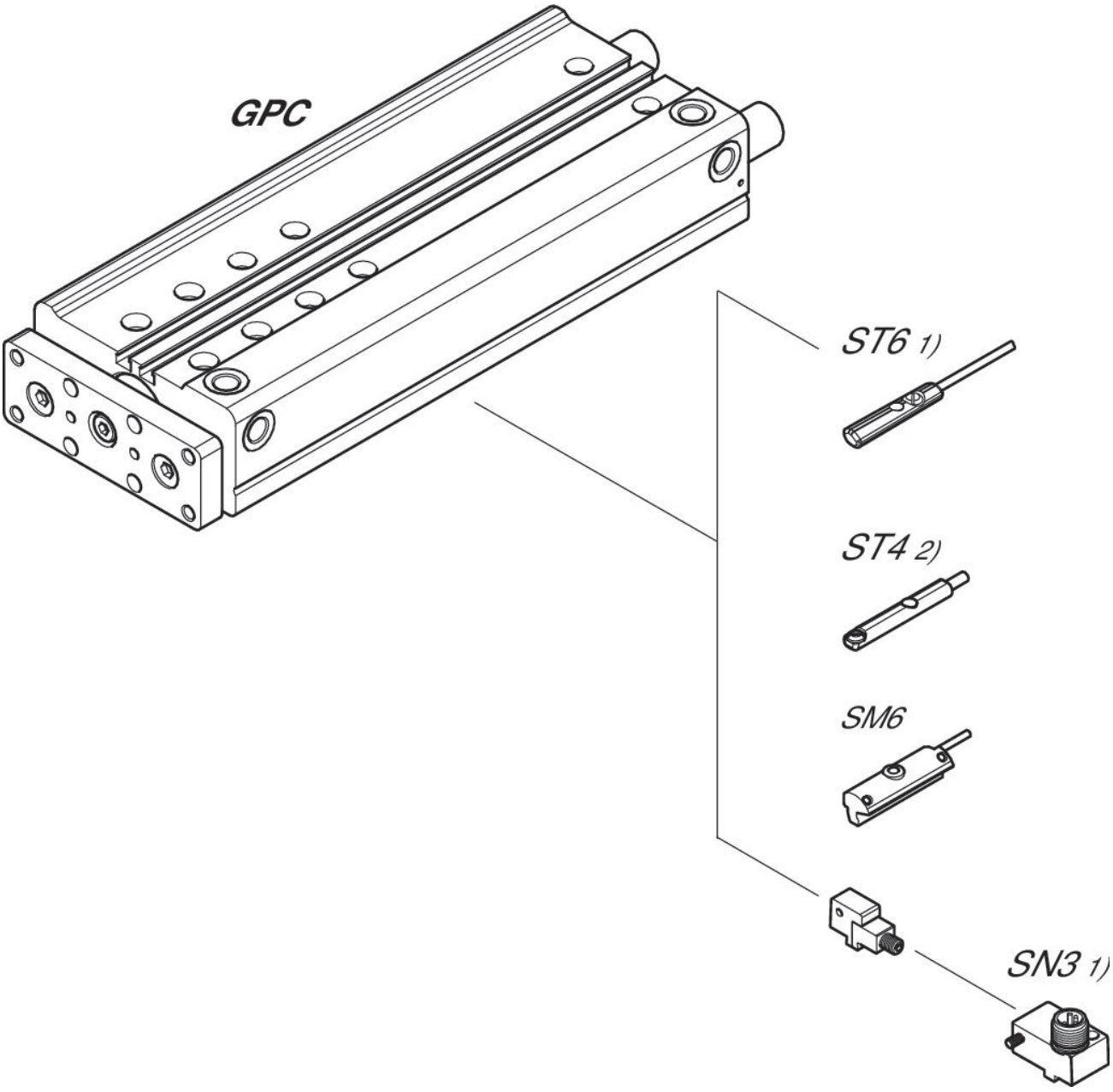

1) ≤ Ø12 mm (GPC-BV, GPC-E, GPC-TL)
2) Only for Ø10 mm (GPC-BV) and all Ø (GPC-ST)
NOTE: This overview drawing is only for orientation to indicate where the various accessory parts can be fastened to the cylinder. The illustration has been simplified for this purpose. It is thus not possible to derive the dimensions from this overview.