Series CH01

0821201010

2024-10-22

- Qn = [[38] l/min] ... [[2800] l/min]

AVENTICS Series CH01 Throttle valves

Series CH throttle valves can be used for nominal flows up to 2,800 l/min. The Series features special versions with integrated silencer and screw-in variants.



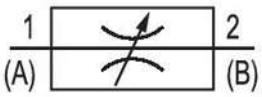

Technical data

Industry	Industrial
Min. working pressure	0 bar
Max. working pressure	10 bar
Min. ambient temperature	0 °C
Max. ambient temperature	80 °C
Min. medium temperature	0 °C
Max. medium temperature	80 °C
Port 1	G 1/8
Port 2	G 1/8
Medium	Compressed air
Compressed air connection type 2	Internal thread
Compressed air connection type	Internal thread
Throttle bore Ø	1 mm
Flow Qn	38 l/min
Weight	0.035 kg
Housing material	Aluminum
Surface housing	anodized
Seal material	Acrylonitrile butadiene rubber
Material flow control screw	Steel, chrome-plated

Surface flow control screw	galvanized
Part No.	0821201010

Technical information

The min. control pressure must be adhered to, since otherwise faulty switching and valve failure may result!

The pressure dew point must be at least 15 °C less than ambient and medium temperature and may not exceed 3 °C.

The oil content of compressed air must remain constant during the life cycle.

Use only the approved oils from AVENTICS. Further information can be found in the “Technical information” document (available in https://www.emerson.com/en-us/support).

Dimensions

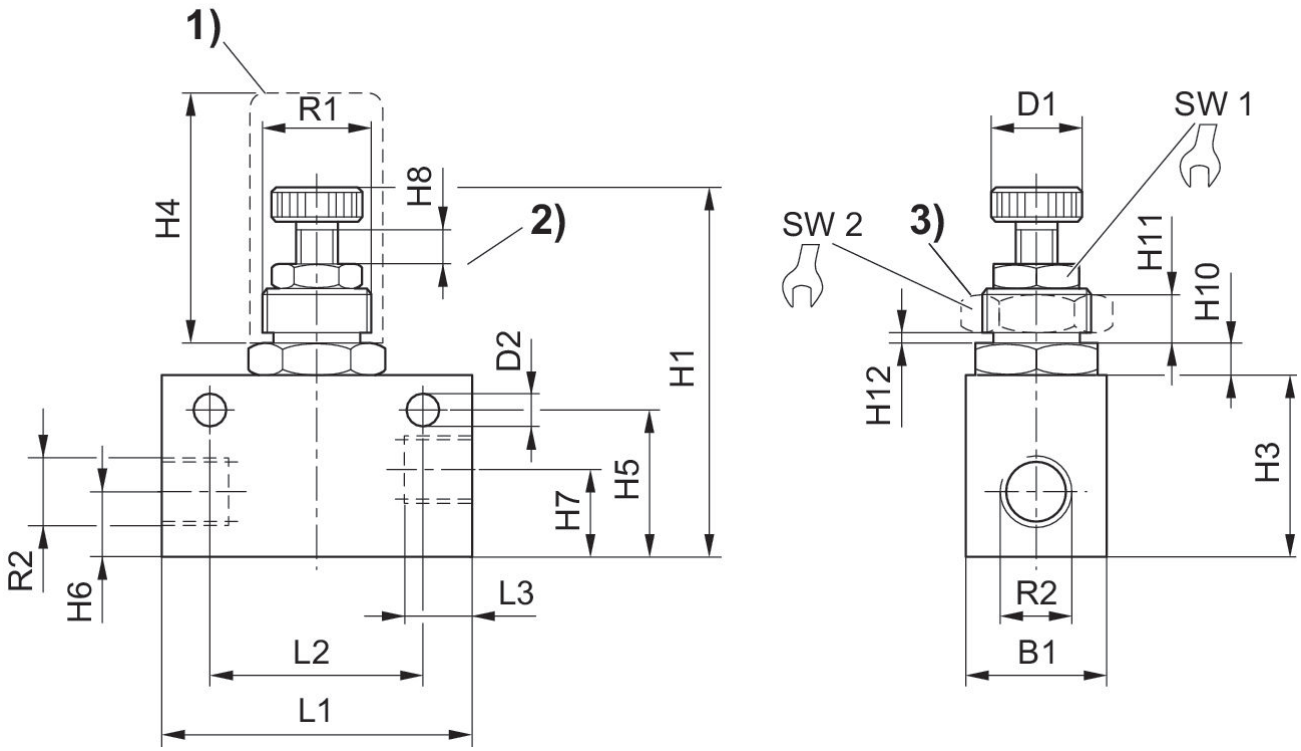

1) protective cap 2) throttle setting range 3) nut for control panel installation

Part No.	Port G	R1	R2	B1	D1	D2	H1	H3	H4
0821201010	G 1/8	M12x1	G 1/8	16	9,8	4,5	56	20	35
0821201004	G 1/8	M12x1	G 1/8	16	9,8	4.5	56	20	35
0821201011	G 1/4	M20x1,5	G 1/4	25	15	5.5	70	32	40

Part No.	H5	H6	H7	H8	H10	H11	H12	L1	L2
0821201010	16.5	8	8	4	4,2	4	0	35	25
0821201004	16.5	8	8	4	4,2	4	0	35	25
0821201011	26	15	11	5	5.5	6	0	55	38

Part No.	L3	SW1	SW2
0821201010	8	10	17
0821201004	8	10	17
0821201011	12	13	24