LPCB1134

Pushbutton actuator, spring return, with symbol Ø22mm Platinum series chromed plastic, flush, STOP/Red



Product designation			Pushbutton actuators, spring return, with symbol
Product type designation			LPCB11
General characteristics			
Colour			Red
Type of positions			Flush
Material			Polyamide
IEC degree of protection			IP66, IP67 and IP69K
Mechanical features			
Operating force		kg-lb	<0.5Kg / 1.1lb
Mechanical life		cycles	5000000
Fixing			Without mounting adapter
Mounting adapter			LPXAU120
Weight		g	25
UL technical data			
UL degree of protection			Type1, 2, 3R, 4, 4X, 12, 12K
Ambient conditions			
Temperature			
	Operating temperature		
	min	°C	-25
	max	°C	+70
	Storage temperature		
	min	°C	-40
	max	°C	+85

Dimensions

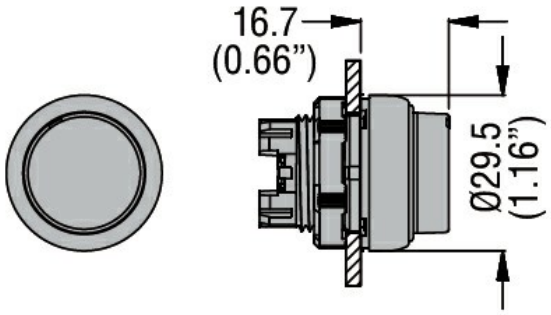

Certifications and compliance

Compliance

CSA C22.2 n° 14
IEC/EN/BS 60947-1
IEC/EN/BS 60947-5-1

The characteristics described in this document are subject to updates or modifications at any time. The descriptions, technical and functional information, illustrations and instructions in this brochure are purely illustrative, and are consequently not contractually binding

	UL508
Certificates	
	CCC
	cULus
	EAC
	RINA

ETIM classification

ETIM 8.0	EC000221 - Front element for push button

The characteristics described in this document are subject to updates or modifications at any time. The descriptions, technical and functional information, illustrations and instructions in this brochure are purely illustrative, and are consequently not contractually binding