5/2-directional valve, Series 740

- ATEX optional
- 5/2
- Qn = 700-950 l/min
- Pipe connection
- Compressed air connection output : Ø 8x1 Ø 10x1
- Electrical connection : Plug, EN 175301-803, form A
- -25 °C cold-resistant
- Can be assembled into blocks
- Manual override : without detent, with detent
- single solenoid
- With air spring return
- Pilot : Internal



Type	Diaphragm poppet valve
Activation	Electrically
Pilot	Internal
Sealing principle	Soft sealing
Blocking principle	Single base plate principle Plate principle
Working pressure min./max.	1,5 ... 10 bar
Ambient temperature min./max.	-25 ... 50 °C
Medium temperature min./max.	-25 ... 50 °C
Medium	Compressed air
Max. particle size	50 µm
Oil content of compressed air	0 ... 5 mg/m³
Nominal flow Qn	See table below
Connector standard	EN 175301-803:2006
Protection class with connection	IP65
Reverse polarity protection	Protected against polarity reversal
Compatibility index	See table below
Duty cycle	100 %
Typ. switch-on time	17 ms
Typ. switch-off time	24 ms
Mounting on manifold strip	PRS strip
Weight	See table below

Technical data

Part No.		MO	Compressed air connection	Compressed air connection
			Input	Output
5727400220			Ø 8x1	Ø 8x1
5727400420			Ø 8x1	Ø 8x1
5727420220			Ø 8x1	Ø 8x1
5727450220			Ø 10x1	Ø 10x1
5727450420			Ø 10x1	Ø 10x1
5727405280			Ø 8x1	Ø 8x1
5727405480			Ø 8x1	Ø 8x1
5727455280			Ø 10x1	Ø 10x1
5727455480			Ø 10x1	Ø 10x1
5727405302			Ø 8x1	Ø 8x1
5727455302			Ø 10x1	Ø 10x1

Part No.	Compressed air connection	Operational voltage	Operational voltage
	Exhaust	DC	AC 50 Hz
5727400220	M14x1	24 V	-
5727400420	M14x1	24 V	-
5727420220	M14x1	24 V	-
5727450220	M14x1	24 V	-
5727450420	M14x1	24 V	-
5727405280	M14x1	-	230 V
5727405480	M14x1	-	230 V
5727455280	M14x1	-	230 V
5727455480	M14x1	-	230 V
5727405302	M14x1	-	-
5727455302	M14x1	-	-

Part No.	Operational voltage	Voltage tolerance	Voltage tolerance	Voltage tolerance
	AC 60 Hz	DC	AC 50 Hz	AC 60 Hz
5727400220	-	-10% / +10%	-	-
5727400420	-	-10% / +10%	-	-
5727420220	-	-10% / +10%	-	-
5727450220	-	-10% / +10%	-	-
5727450420	-	-10% / +10%	-	-
5727405280	230 V	-	-20% / +10%	-10% / +20%
5727405480	230 V	-	-20% / +10%	-10% / +20%
5727455280	230 V	-	-20% / +10%	-10% / +20%
5727455480	230 V	-	-20% / +10%	-10% / +20%
5727405302	-	-	-	-
5727455302	-	-	-	-

Part No.	Power consumption	Holding power	Holding power	Switch-on power
	DC	AC 50 Hz	AC 60 Hz	AC 50 Hz
5727400220	2,1 W	-	-	-
5727400420	2,1 W	-	-	-
5727420220	2,1 W	-	-	-

Part No.	Power consumption	Holding power	Holding power	Switch-on power
	DC	AC 50 Hz	AC 60 Hz	AC 50 Hz
5727450220	2,1 W	-	-	-
5727450420	2,1 W	-	-	-
5727405280	2,1 W	4,18 VA	3,3 VA	6,6 VA
5727405480	2,1 W	4,18 VA	3,3 VA	6,6 VA
5727455280	2,1 W	4,18 VA	3,3 VA	6,6 VA
5727455480	2,1 W	4,18 VA	3,3 VA	6,6 VA
5727405302	-	-	-	-
5727455302	-	-	-	-

Part No.	Switch-on power	Nominal flow Qn	Compatibility index	Throttle
	AC 60 Hz			
5727400220	-	700 l/min	13 14	with throttle
5727400420	-	700 l/min	13 14	with throttle
5727420220	-	700 l/min	13 14	with throttle
5727450220	-	950 l/min	14 14	with throttle
5727450420	-	950 l/min	13 14	with throttle
5727405280	5,5 VA	700 l/min	14	with throttle
5727405480	5,5 VA	700 l/min	14	with throttle
5727455280	5,5 VA	950 l/min	14	with throttle
5727455480	5,5 VA	950 l/min	14	with throttle
5727405302	-	700 l/min	14	with throttle
5727455302	-	950 l/min	14	with throttle

Part No.	Valve plug connector	basic valve with electrical connector
5727400220	With valve plug connector	-
5727400420	Without valve plug connector	-
5727420220	With valve plug connector	-
5727450220	With valve plug connector	-
5727450420	Without valve plug connector	-
5727405280	With valve plug connector	-
5727405480	Without valve plug connector	-
5727455280	With valve plug connector	-
5727455480	Without valve plug connector	-
5727405302	-	Basic valve without coil
5727455302	-	Basic valve without coil

Part No.	Reverse polarity protection	ATEX	Weight	
5727400220	Protected against polarity reversal	-	0,339 kg	-
5727400420	Protected against polarity reversal	-	0,317 kg	-
5727420220	Protected against polarity reversal	ATEX	0,335 kg	1)
5727450220	Protected against polarity reversal	-	0,341 kg	-
5727450420	Protected against polarity reversal	-	0,318 kg	-
5727405280	Protected against polarity reversal	-	0,335 kg	-
5727405480	Protected against polarity reversal	-	0,311 kg	-
5727455280	Protected against polarity reversal	-	0,336 kg	-
5727455480	Protected against polarity reversal	-	0,311 kg	-
5727405302	-	ATEX optional	0,221 kg	-

Part No.	Reverse polarity protection	ATEX	Weight	
5727455302	-	ATEX optional	0,22 kg	-

Nominal flow Qn at 6 bar and Δp = 1 bar, MO = Manual override

1) II 3G3D EEX nA IIB T4 IP65 T125 °C X

Technical information

The min. control pressure must be adhered to, since otherwise faulty switching and valve failure may result!
The pressure dew point must be at least 15 °C under ambient and medium temperature and may not exceed 3 °C .
The oil content of compressed air must remain constant during the life cycle.
Use only the approved oils from AVENTICS. Further information can be found in the “Technical information” document (available in the MediaCentre).

ATEX optional: ATEX version can be produced by combining the basic valve without coil with an ATEX coil. ATEX ID: see ATEX coils catalog page.

Technical information

Material	
Housing	Polyarylamide Polyoxymethylene
Seals	Acrylonitrile butadiene rubber

Dimensions

Dimensions

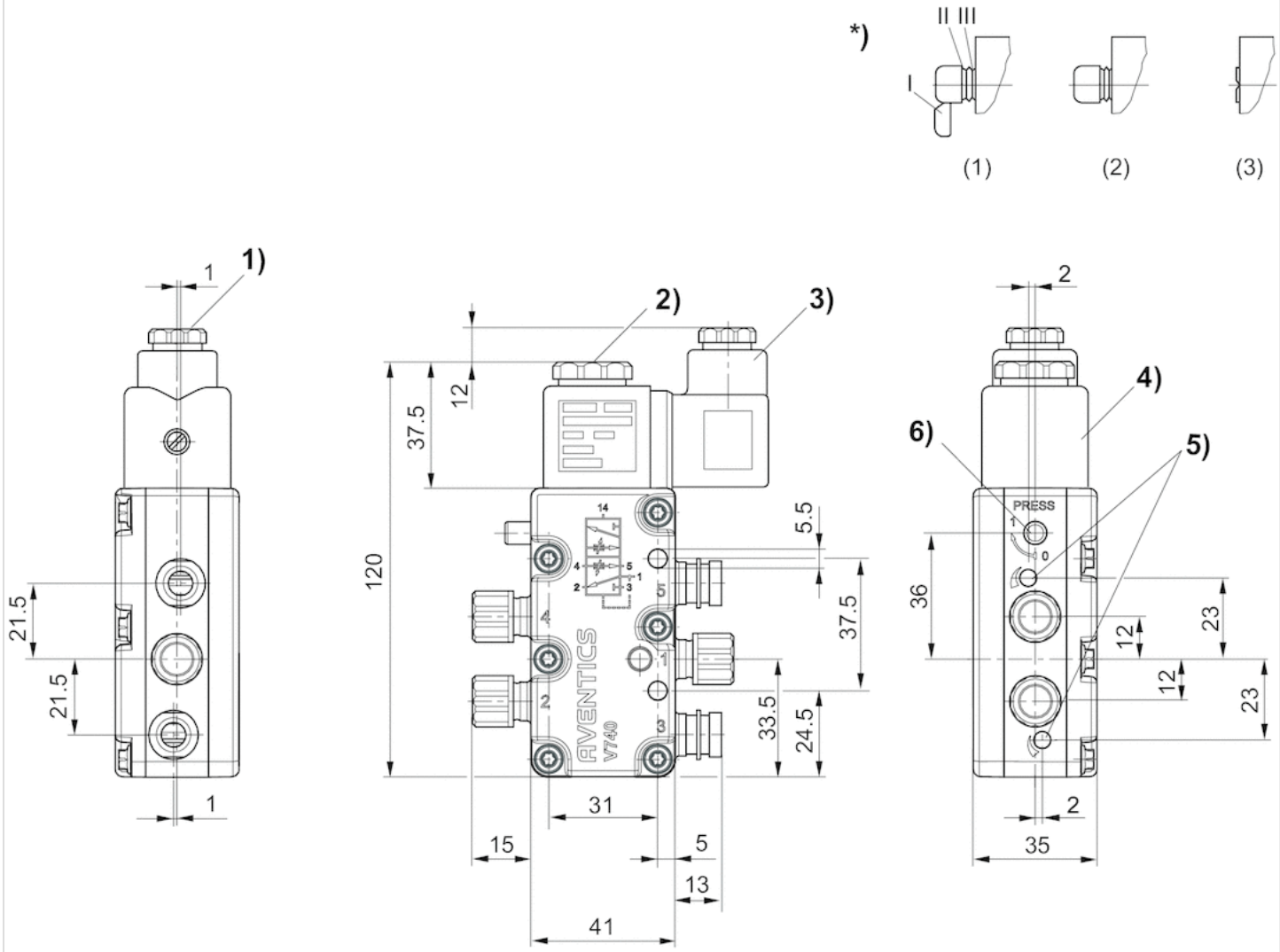

1) Gland fitting M16x1.52) M5 internal thread accessible under cap3) Valve plug connector can be rotated at 90° intervals4) Coil can be plugged at 45° intervals5) Flow control screw for exhausts 5 (R) and 3 (S)6) Manual override and position indicator*): Manual override:Manual actuation: (1) with detent - push and turn into position 1 (2) without detent - remove segment I - push onlyActuation with tool: (3) with detent - remove segments up to II - push with tool and turn into position 1

Efficient pneumatic solutions, our program: cylinders and drives, valves and valve systems, air supply management



Visit us: Emerson.com/Aventics

Your local contact: Emerson.com/contactus

Emerson.com

Facebook.com/EmersonAutomationSolutions

LinkedIn.com/company/Emerson-Automation-Solutions

Twitter.com/EMR_Automation

An example configuration is depicted on the title page. The delivered product may thus vary from that in the illustration. Subject to change. This Document, as well as the data, specifications and other information set forth in it, are the exclusive property of AVENTICS GmbH. It may not be reproduced or given to third parties without its consent. Only use the AVENTICS products shown in industrial applications. Read the product documentation completely and carefully before using the product. Observe the applicable regulations and laws of the respective country. When integrating the product into applications, note the system manufacturer's specifications for safe use of the product. The data specified only serve to describe the product. No statements concerning a certain condition or suitability for a certain application can be derived from our information. The information given does not release the user from the obligation of own judgement and verification. It must be remembered that the products are subject to a natural process of wear and aging.

The Emerson logo is a trademark and service mark of Emerson Electric Co. Brand logotype are registered trademarks of one of the Emerson family of companies. All other marks are the property of their respective owners. © 2023 Emerson Electric Co. All rights reserved.

2023-01

EMERSON

CONSIDER IT SOLVED™