Product data sheet
Characteristics

XS7J1A1PBL2
Inductive proximity sensors XS, inductive sensor XS7 8x22x8, PBT, Sn2.5 mm, 12...24 VDC, cable 2 m



Main

Range of product	Telemecanique Inductive proximity sensors XS
Series name	General purpose
Sensor type	Inductive proximity sensor
Device application	-
Sensor name	XS7
Sensor design	Flat form 8 x 22 x 8
Size	8 mm
Body type	Fixed
Detector flush mounting acceptance	Flush mountable
Material	Plastic
Enclosure material	PBT
Type of output signal	Discrete
Wiring technique	3-wire
Discrete output function	1 NC
Output circuit type	DC
Discrete output type	PNP
Electrical connection	Cable
Cable length	2 m
[Us] rated supply voltage	12...24 V DC with reverse polarity protection
Switching capacity in mA	<= 100 mA DC with overload and short-circuit protection
IP degree of protection	IP67 conforming to IEC 60529

Complementary

Detection face	Frontal
Front material	PBT
Operating zone	0…2 mm
Differential travel	1...15% of Sr
Cable composition	3 x 0.11 mm²
Wire insulation material	PVC
Status LED	Output state: 1 LED (yellow)
Supply voltage limits	10…36 V DC
Switching frequency	<= 2000 Hz
Maximum voltage drop	<2 V (closed)
Current consumption	<= 10 mA no-load
Maximum delay first up	5 ms
Maximum delay response	0.1 ms
Maximum delay recovery	0.1 ms
Marking	CE
Depth	8 mm
Height	22 mm
Width	8 mm

The information provided in this documentation contains general descriptions and/or technical characteristics of the performance of the products contained herein.
This documentation is not intended as a substitute for and is not to be used for determining suitability or reliability of these products for specific user applications.
It is the duty of any such user or integrator to perform the appropriate and complete risk analysis, evaluation and testing of the products with respect to the relevant specific application or use thereof.
Neither TMSS Holding nor any of its affiliates or subsidiaries shall be responsible or liable for misuse of the information contained herein.

Environment

Product certifications	UL[RETURN]CSA[RETURN]C-Tick
Ambient air temperature for operation	-25…70 °C
Ambient air temperature for storage	-40…85 °C
Vibration resistance	25 gn amplitude = +/- 2 mm (f = 10…55 Hz) conforming to IEC 60068-2-6
Shock resistance	50 gn for 11 ms conforming to IEC 60068-2-27

Packing Units

Unit Type of Package 1	PCE
Number of Units in Package 1	1
Package 1 Height	4.2 cm
Package 1 Width	9.5 cm
Package 1 Length	13.2 cm
Package 1 Weight	48.0 g
Unit Type of Package 2	S02
Number of Units in Package 2	16
Package 2 Height	15.0 cm
Package 2 Width	30.0 cm
Package 2 Length	40.0 cm
Package 2 Weight	1.134 kg

Offer Sustainability

Sustainable offer status	Green Premium product
Circularity Profile	No need of specific recycling operations
California proposition 65	WARNING: This product can expose you to chemicals including: Diisononyl phthalate (DINP), which is known to the State of California to cause cancer, and Di-isodecyl phthalate (DIDP), which is known to the State of California to cause birth defects or other reproductive harm. For more information go to www.P65Warnings.ca.gov
For all Reach Rohs enquiries contact us at	sustainability@tesensors.com

Contractual warranty

Warranty	18 months

Dimensions

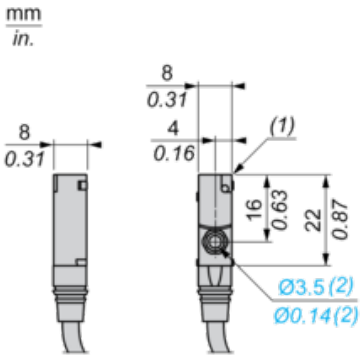

(1) LED
(2) For CHC type screws

Setting-up

Minimum Mounting Distances (mm)

Side by Side

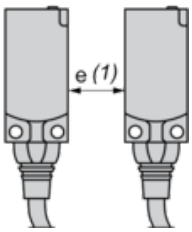

e (1) ≥ 7.5

Face to Face

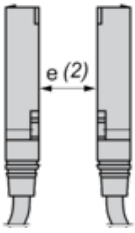

e (2) ≥ 20

Facing a Metal Object

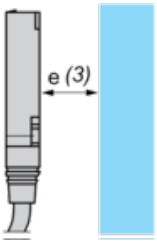

e (3) ≥ 7.5

Wiring Schemes

PNP

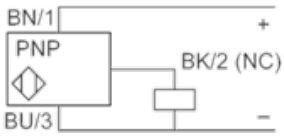

BU : Blue
BN : Brown
BK : Black