Midi free-standing Beacons / Rotating Mirror Beacon 885

Rotating Mirror Beacon LED 24VAC/DC RD



Part No.: 885.130.75

MECHANICAL DATA	
Height	151 mm
Diameter	98 mm
Materials	PC PC/ABS
Dome colour	Red
Housing colour	Black
Protection category	IP65
Connection	Screw terminals
cross-sectional area maximum	1,50mm² / 16AWG
Cable entry	Rubber pinch
Cable entry minimum	d = 5 mm
Cable entry maximum	d = 7 mm
Type of fixing	Base mounting
Working temperature minimum	-30°C
Working temperature maximum	+50°C
Weight with packaging	370 g
Product weight	320 g

ELECTRICAL DATA	
Operating voltage	24V
Operating voltage type	AC/DC
Operating voltage frequency	50Hz
Operating voltage tolerance	+/- 10%
Rated operational voltage	24 VDC
Rated operational current	175 mA
Rated inrush current	<10A
Protection class	Protection class 2
Pollution degree	3
Overvoltage category	II

OPTICAL DATA	
Light source	LED
Light colour	Red
Optical signal image	Revolving
Service life optical	50,000 h maximum
Rotation speed (rpm)	180 U/min

APPROVAL DATA	
Conforms with CE	Yes

! For additional installation and mounting information, refer to the appropriate user guide at www.werma.com. This printed copy is for information only and is subject to alteration.

Midi free-standing Beacons / Rotating Mirror Beacon 885

Rotating Mirror Beacon LED 24VAC/DC RD

WEEE	Yes
Conforms with RED directive	No
Conforms with ATEX-directive	No
Conforms with CCC-Ex	No
Conforms with CCC	No
Conforms with UL	No
Conforms with FCC	No
Conforms with IC	No
EAC certificate available	Yes
Conforms with UKCA (Importer)	Yes (WERMA (UK) Ltd.)
Conforms with CMIM	No
Conforms with AS-I	No
Conforms with DNV	No
Conforms with RoHS CN	No
Conforms with VdS	No

! For additional installation and mounting information, refer to the appropriate user guide at www.werma.com. This printed copy is for information only and is subject to alteration.

Midi free-standing Beacons / Rotating Mirror Beacon 885

Rotating Mirror Beacon LED 24VAC/DC RD

DRAWING

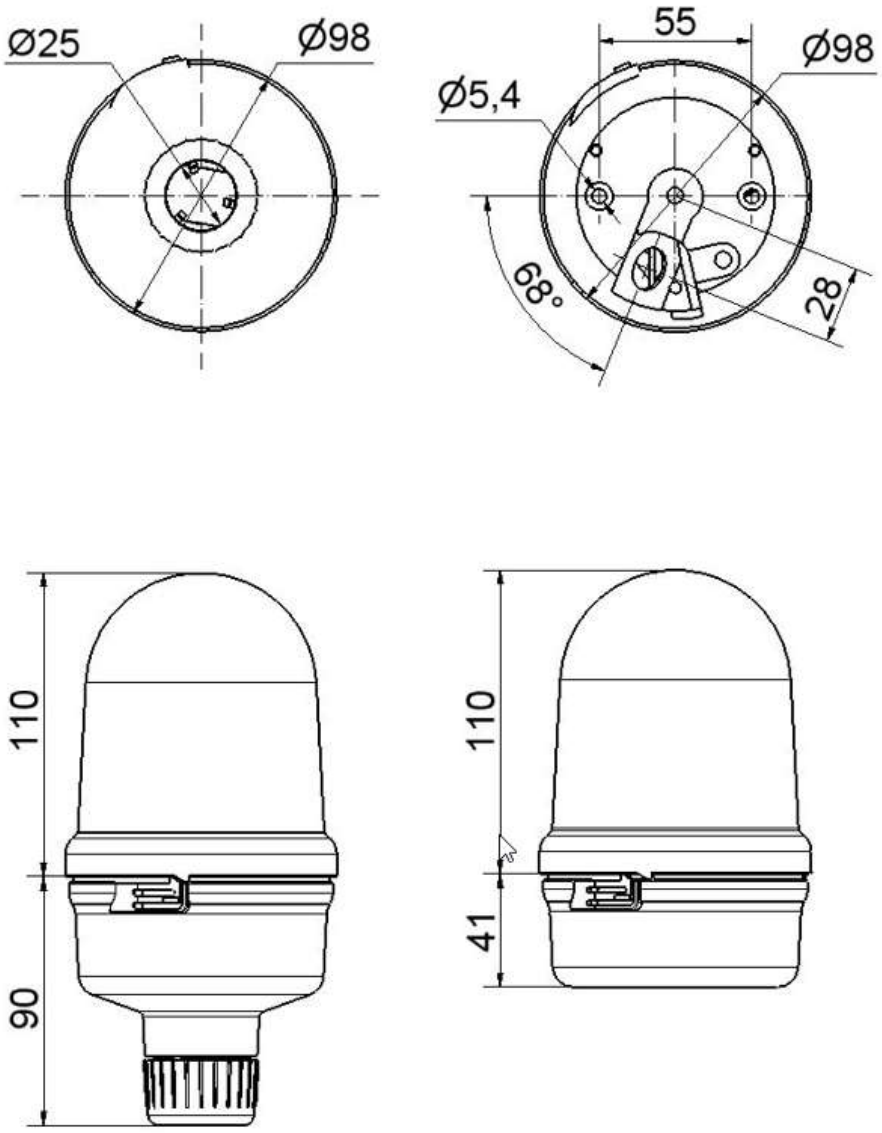

! For additional installation and mounting information, refer to the appropriate user guide at www.werma.com. This printed copy is for information only and is subject to alteration.