PK5520

Pressure switch with intuitive switch point setting

PK-400-SFG14-PSPKG/US/ /W

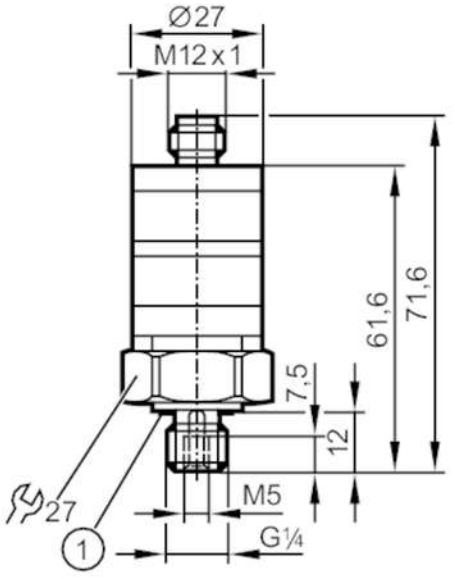

1 Sealing

Product characteristics			
Number of inputs and outputs	Number of digital outputs: 1		
Measuring range	0...400 bar	0...5800 psi	
Process connection	threaded connection G 1/4 external thread internal thread:M5		
Application			
Application	for industrial applications		
Media	liquids and gases		
Medium temperature [°C]	-25...80		
Min. bursting pressure	1600 bar	23200 psi	160 MPa
Pressure rating	600 bar	8700 psi	60 MPa
Type of pressure	relative pressure		
Electrical data			
Operating voltage [V]	9.6...32 DC		
Current consumption [mA]	< 25		
Min. insulation resistance [MΩ]	100; (500 V DC)		
Protection class	III		
Reverse polarity protection	yes		
Inputs / outputs			
Number of inputs and outputs	Number of digital outputs: 1		
Outputs			
Total number of outputs	1		
Output signal	switching signal		
Electrical design	PNP		
Number of digital outputs	1		
Output function	normally open		

PK5520

Pressure switch with intuitive switch point setting

PK-400-SFG14-PSPKG/US/ /W

Max. voltage drop switching output DC	[V]	2	
Permanent current rating of switching output DC	[mA]	500	
Switching frequency DC	[Hz]	100	
Short-circuit protection		yes	
Type of short-circuit protection		pulsed	
Overload protection		yes	
Measuring/setting range			
Measuring range		0...400 bar	0...5800 psi
Set point SP		12...400 bar	175...5800 psi
Hysteresis		8 bar	116 psi
Accuracy / deviations			
Switch point accuracy	[% of the final value]	< ± 2,5; (Setting accuracy)	
Repeatability	[% of the final value]	< ± 0,5; (with temperature fluctuations < 10 K)	
Characteristics deviation	[% of the final value]	< ± 1,5 (BFSL) / < ± 2,5 (LS); (BFSL = Best Fit Straight Line; LS = limit value setting)	
Temperature drift per 10 K		< ± 0.5	
Software / programming			
Adjustment of the switch point		setting ring	
Operating conditions			
Ambient temperature	[°C]	-25...80	
Storage temperature	[°C]	-40...100	
Protection		IP 67	
Tests / approvals			
EMC		DIN EN 61000-6-2	
		DIN EN 61000-6-3	
Shock resistance		DIN IEC 68-2-27	50 g (11 ms)
Vibration resistance		DIN IEC 68-2-6	20 g (10...2000 Hz)
MTTF	[years]	511	
Pressure Equipment Directive		Sound engineering practice; can be used for group 2 fluids; group 1 fluids on request	
Mechanical data			
Weight	[g]	94.5	
Housing		cylindrical	
Dimensions	[mm]	Ø 27 / L = 71.6	
Materials		PBT; PC; FKM; stainless steel (316L/1.4404)	
Materials (wetted parts)		stainless steel (316L/1.4404); FKM	
Min. pressure cycles		50 million	
Tightening torque	[Nm]	25	
Process connection		threaded connection G 1/4 external thread internal thread:M5	
Restrictor element integrated		no (can be retrofitted)	

PK5520

Pressure switch with intuitive switch point setting

PK-400-SFG14-PSPKG/US/ /W

Displays / operating elements		
Display	operation	LED, green
	switching status	LED, yellow
With scale	yes	

Remarks	
Pack quantity	1 pcs.

Electrical connection

Connector: 1 x M12; coding: A



Connection

