IE5344

Inductive sensor

IEBC003BASKG/0,3M/AS

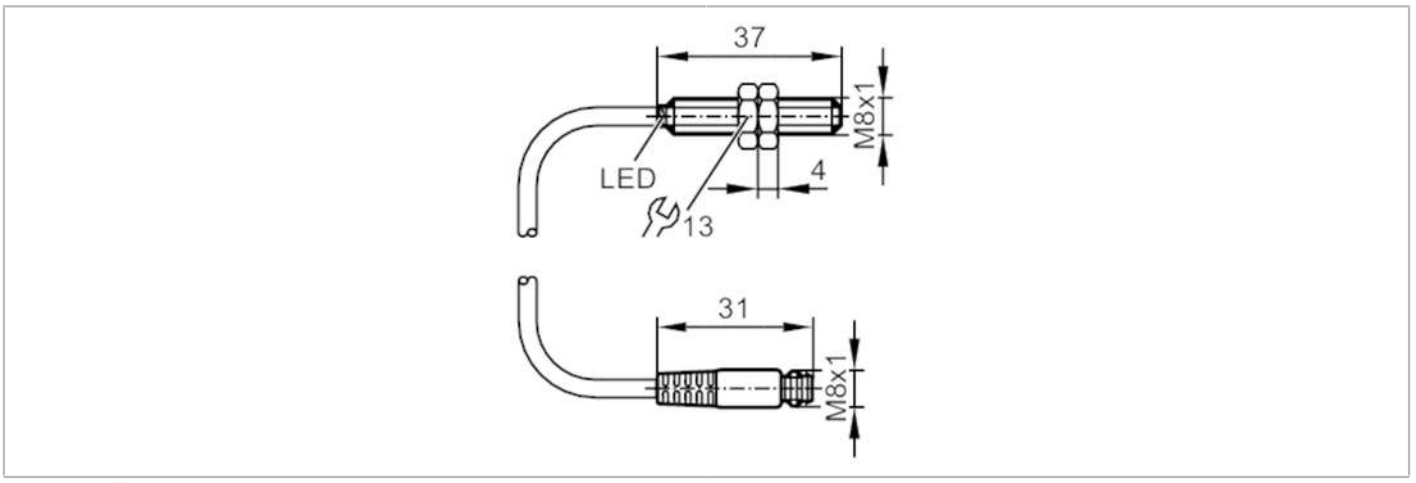

Product characteristics		
Electrical design		PNP/NPN
Output function		normally open
Sensing range	[mm]	3
Housing		threaded type
Dimensions	[mm]	M8 x 1 / L = 37
Electrical data		
Operating voltage	[V]	10...30 DC
Current consumption	[mA]	< 10; (only in 3-wire operation)
Protection class		III
Reverse polarity protection		yes
Outputs		
Electrical design		PNP/NPN
Output function		normally open
Max. voltage drop switching output DC	[V]	2.8
Minimum load current	[mA]	2
Max. leakage current	[mA]	0.5; (only in 2-wire operation)
Permanent current rating of switching output DC	[mA]	100; (only in 2-wire operation)
Switching frequency DC	[Hz]	1000
Short-circuit protection		yes
Type of short-circuit protection		pulsed
Overload protection		yes
Detection zone		
Sensing range	[mm]	3
Operating distance	[mm]	0...2.4
Accuracy / deviations		
Correction factor		steel: 1 / stainless steel: 0.7 / brass: 0.5 / aluminium: 0.4 / copper: 0.3

IE5344

Inductive sensor

IEBC003BASKG/0,3M/AS

Hysteresis	[% of Sr]	1...15	
Operating conditions			
Ambient temperature	[°C]	0...60	
Protection		IP 67	
Tests / approvals			
EMC		EN 60947-5-2	
MTTF	[years]	1517	
UL approval		Ta	-25...80 °C
		Enclosure type	Type 1
		power supply	Limited Voltage/Current
		File number UL	E174191
Mechanical data			
Weight	[g]	24.6	
Housing		threaded type	
Mounting		flush mountable	
Dimensions	[mm]	M8 x 1 / L = 37	
Thread designation		M8 x 1	
Materials		brass white bronze coated; sensing face: LCP	
Displays / operating elements			
Display		switching status	1 x LED, yellow
Accessories			
Items supplied		lock nuts: 2	
Remarks			
Pack quantity		1 pcs.	

IE5344

Inductive sensor

IEBC003BASKG/0,3M/AS

Electrical connection - plug

Cable: 0.3 m, PVC; 3 x 0.14 mm²

Connector: 1 x M8; coding: A; Locking: snap-fit



