MR0100

MRT2021BAKOA/R/ZH

Magnetic sensors, cylinder sensors

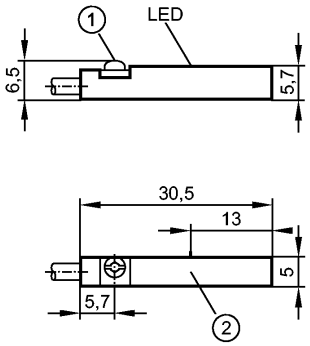

1: Clamping screw with combined slot/hexagon socket head AF 1.5
2: sensing face

Product characteristics		
Cylinder sensor with reed contact		
Plastic housing for T-slot cylinders		
Cable		
[f] flush mountable		
Magnetic sensitivity 2.1 mT		
Travel speed 10 m/s		
Electrical data		
Electrical design		AC/DC PNP/NPN
Operating voltage	[V]	5...120 AC/DC; (for UL supply class 2: 5...60 DC / 5...30 AC)
Protection class		II
Reverse polarity protection		yes
Outputs		
Output function		normally open
Voltage drop	[V]	< 5
Current rating	[mA]	100; External protective circuit for inductive load (valve, contactor, etc.) necessary.
Short-circuit proof		no
Overload protection		no
Switching frequency	[Hz]	1000
Switching power (max.) [W]		10
Range		
Magnetic sensitivity	[mT]	2.1
Travel speed	[m/s]	10
Accuracy / deviations		
Hysteresis	[mm]	1
Repeatability	[mm]	± 0.2
Reaction times		
Fall time	[ms]	≤ 0.1
Make time incl. bounce	[ms]	≤ 0.6
Environment		
Ambient temperature	[°C]	-25...70
Protection		IP 65 / IP 67
Tests / approvals		

EMC		EN 61000-4-2 ESD: - CD / 8 kV AD EN 61000-4-3 HF radiated: 10 V/m EN 61000-4-4 Burst: 2 kV EN 61000-4-5 Surge: 2 kV (line to line, Ri: 2Ohm) EN 61000-4-6 HF conducted: 10 V EN 55011: class B
MTTF	[Years]	11303

Mechanical data

Mounting		flush mountable
Housing materials		housing: PA (polyamide); Fastening clamp: stainless steel
Switching cycles when connected to PLC [million]		≤ 40
Weight	[kg]	0.027

Displays / operating elements

Output status indication	LED	yellow

Electrical connection

Connection		PUR cable / 2 m; 2 x 0.14 mm²

Wiring
Core colours
BN brown
BU blue

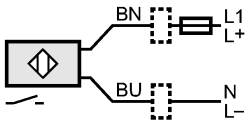

Note: miniature fuse to IEC60127-2 sheet 1,
≤ 0.175 A (fast acting)

Accessories

Accessories (included)		rubber placeholder; cable clip

Remarks

Remarks		No LED function in case of polarity reversal in DC operation. UL - Class 2 source required
Pack quantity	[piece]	1