Piezo Switch N.O.



Point Illumination

PSE M22 PI



RI dotted green

PSE M22 RI

See below:
Approvals and Compliances

Description

- Available in version Standard, lettered, with Point Illumination or Ring Illumination
- RGB, RGY: flexible input voltage from 5 - 28 VDC at constant brightness
- With color combination RGB and RGY
- 7 possible colors with RGB configuration
- 3 possible colors with RGY configuration Assembly by mounting with nut
- Pins / Wire / Crimp Terminal male / Cable with Faston

Unique Selling Proposition

- Variety of design options regarding size, colour, shape, connection or lettering
- High reliability, long lifetime with more than 20 mill. actuations
- With RGB or RGY ring illumination

Characteristics

- Housing material types: aluminum or stainless steel, ring illuminated version additionally made of polyamide
- For use in harsh environments, both indoors and outdoors (see technical data)

Other versions on request

- Switch for longer switching signal duration, type: PSE IV
- Switch for explosion proof applications, type: PSE EX
- Switch with enhanced vandal proof protection, type: PSE HI

References

Alternative: switch vandal improved: PSE HI 22
Alternative: switch for EX-proof applications:
Alternative: Other diameter
Alternative: switch with prolonged signal: PSE AE 16; PSE AE 30; PSE IV 19

Weblinks

pdf data sheet, html datasheet, General Product Information, CAD-Drawings, Product News, Detailed request for product, Microsite

Technical Data

Electrical Data	
Switching Function	momentary
Supply Voltage	24 VDC Ring Illumination 24 VDC Point Illumination
	5 VDC and 12 VDC variants on request (MOQ 500 pieces)
Supply Voltage RGB	5 - 28 VDC
Switching Voltage	max. 42 / 60 VAC/DC
Switching Current	max. 100 mA
Electrical Rating	1 W
Lifetime	20 million actuations at Rated Switching Capacity
Switch Resistance OFF	> 10 MΩ
Switch Resistance ON	< 20 Ω actuated (Ta = 25°C)
Capacity	5 nF
N.O. Closing Impulse Duration	20- 1000 ms depending on actuating force, time and speed
Contact Configuration	free polarity
RGB Illumination	
Current Consumtion (max per color)	16.5 mA @ 5 VDC
	8.2 mA @ 12 VDC
	5.5 mA @ 24 VDC
	4.8 mA @ 28 VDC

Mechanical Data	
Actuating Force	≤ 3 N at ambient temperature
Actuating Travel	0.002 mm
Shock Protection	IK02
Mounting screw torque	2.5 Nm
Climatical Data	
Operating Temperature	-40 to 85 °C
Storage Temperature	-40 to 85 °C
IP-Protection	IP67 acc. to IEC 60529, IP69K acc. to DIN 40050-9
Environmental Assessment	+55°C / 93% r.h. acc. to DIN EN 60068-2-30
Salt Spray Test (acc. to DIN 50021-SS)	24 h / 48 h / 96 h Residence Time
Material	
Housing (depending on type)	Stainless Steel, Aluminum anodized
Actuating Area / Insert (with Ring Illumination)	Stainless Steel, Aluminum anodized
Illuminated Ring (Ring Illumination)	Polyamide

Approvals and Compliances

Detailed information on product approvals, code requirements, usage instructions and detailed test conditions can be looked up in Details about Approvals

SCHURTER products are designed for use in industrial environments. They have approvals from independent testing bodies according to national and international standards. Products with specific characteristics and requirements such as required in the automotive sector according to IATF 16949, medical technology according to ISO 13485 or in the aerospace industry can be offered exclusively with customer-specific, individual agreements by SCHURTER.

Application standards

Application standards where the product can be used

Organization	Design	Standard	Description
	Designed for applications acc.	EMC Directive:	EMC directive 2014/30/EU
	Designed for applications acc.	MIL-STD:	202F Method 107G, 202F Method 204D, 202F Method 213B, 416D Method RS103, 810E Method 501.3, 810E Method 502.3, 810E Method 507.3
VDE	Designed for applications acc.	VDE Certificate Number:	DIN EN 61000-4-2, DIN EN 61000-4-4, DIN EN 61000-4-5
IEC	Designed for applications acc.	IEC/UL 62368-1	Audio/video, information and communication technology equipment - Part 1: Safety requirements

Compliances

The product complies with following Guide Lines

Identification	Details	Initiator	Description
CE	CE declaration of conformity	SCHURTER AG	The CE marking declares that the product complies with the applicable requirements laid down in the harmonisation of Community legislation on its affixing in accordance with EU Regulation 765/2008.
UK CA	UKCA declaration of conformity	SCHURTER AG	The UKCA marking declares that the product complies with the applicable requirements laid down in the British Amendment of Regulation (EC) 765/2008.
RoHS	RoHS	SCHURTER AG	Directive RoHS 2011/65/EU, Amendment (EU) 2015/863
REACH	REACH	SCHURTER AG	On 1 June 2007, Regulation (EC) No 1907/2006 on the Registration, Evaluation, Authorization and Restriction of Chemicals 1 (abbreviated as "REACH") entered into force.

Dimension [mm]

PSE M22 with pins

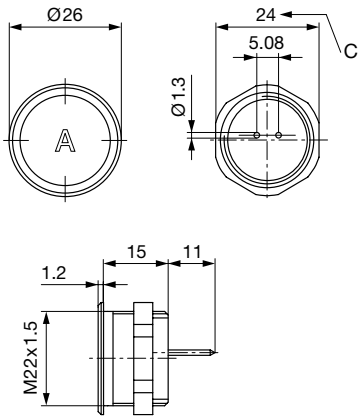

PSE with Crimp Terminal male available on request

PSE M22 with Wire

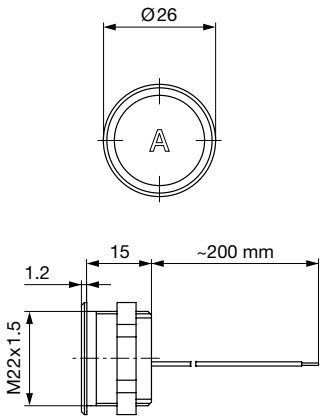

PSE M22 with Crimp Terminal male

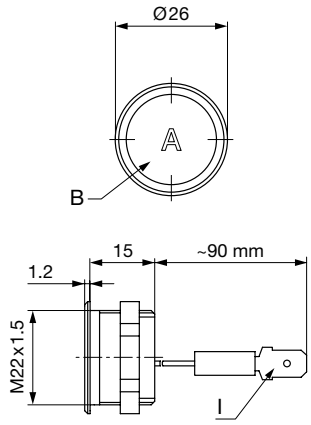

PSE M22 PI with Crimp Terminal male

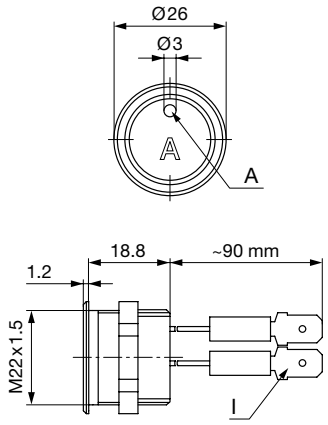

Version available on request

PSE M22 RI with Wires

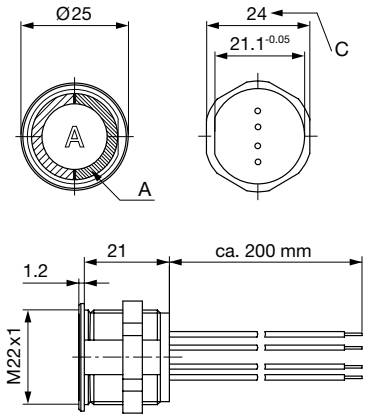

PSE M22 RI with Plug Connector

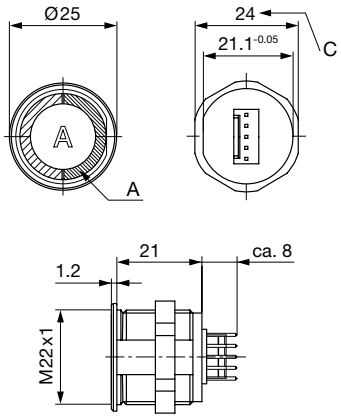

PSE M22 RI RGB with wires

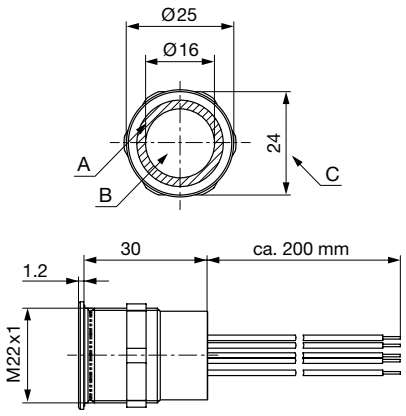

Design actuating area

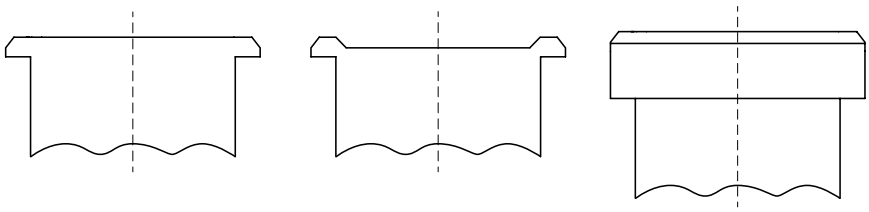

Legend:
A = Illumination Area
B = Actuating Area
C = Width Across Flats
I = Crimp Terminal male 6.3 x 0.8
PI = Point Illumination
RI = Ring Illumination

Lettering:
- either with/without lettering
- position of the connections with respect to the position of the lettering is not defined

F) with finger guidance
E) without finger guidance
3) elevated front design: M19 (standard, others on request)

Dimension

PSE 22 RGB

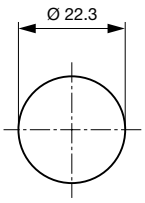

Drilling diagram

PSE M22 RI (excl. RGB)

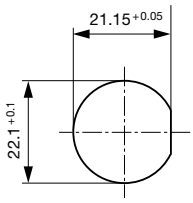

Drilling diagram

Diagrams

PSE PI

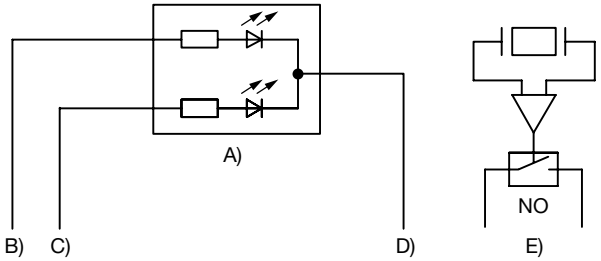

A) Double-LED (2 colors, 3 pins) or simple LED (2 pins)
B) Cable 1 (color 1 of the LED), Supply voltage
C) Cable 2 (color 2 of the LED), Supply voltage
D) Cable 3 (black), Mass
E) Cable 4 and 5 (white), input and output PSE switch

PSE M22 RI with Wires, 12/24 V

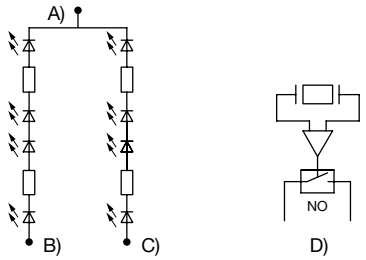

A) Cable 5 (black), Common mass of both LED groups
B) Cable 1 (color of the LEDs), Supply voltage first LED group
C) Cable 2 (color of the LEDs), Supply voltage second LED group
D) Cable 3 and 4 (white), Input and output PSE switch

PSE M22 RI with Quick Connect Terminal, 12/24 V

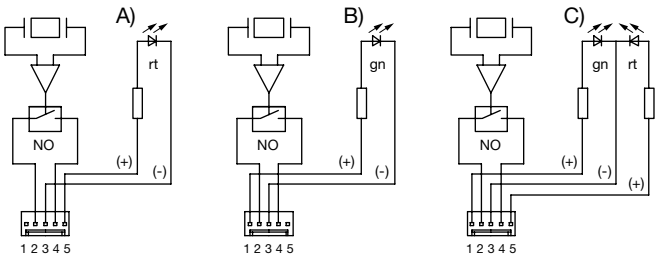

A) Illuminated red
B) Illuminated green
C) Illuminated red/green

PI = point illumination
RI = ring illumination

PSE M22 / M30 RI RGY

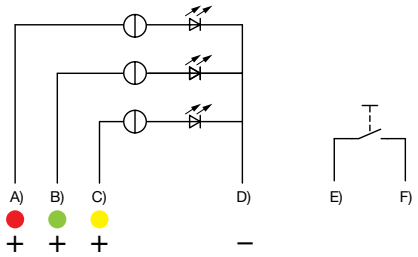

A) Cable (color of the LED), Supply voltage
B) Cable (color of the LED), Supply voltage
C) Cable (color of the LED), Supply voltage
D) Cable (black), Common mass
E) Cable (white), Input and output MCS switch
F) Cable (white), Input and output MCS switch

Illumination options for RGY

Lighting type	Active terminal A) ●	Active terminal B) ●	Active terminal C) ●	Resulting Color
Multicolor Singlecolor	A			Red ●
Multicolor Singlecolor		B		Green ●
Multicolor Singlecolor			C	Yellow ●

PSE M22 / M30 RI RGB

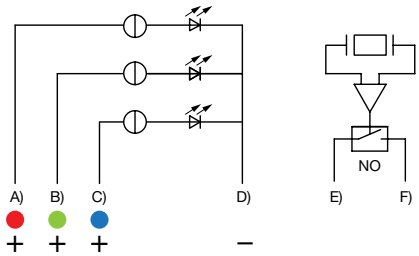

A) Cable 1 (color of the LED), Supply voltage
B) Cable 2 (color of the LED), Supply voltage
C) Cable 3 (color of the LED), Supply voltage
D) Cable 4 (black), Common mass
E) Cable 5/6 (white), Input and output PSE switch
F) Cable 5/6 (white), Input and output PSE switch

Illumination options for RGB

Lighting type	Active terminal A) ●	Active terminal B) ●	Active terminal C) ●	Resulting Color
Multicolor Singlecolor	A			Red ●
Multicolor Singlecolor		B		Green ●
Multicolor Singlecolor			C	Blue ●
Multicolor RGB Additive 2	A	B		Yellow ●
Multicolor RGB Additive 2	A		C	Magenta ●
Multicolor RGB Additive 2		B	C	Cyan ●
Multicolor RGB Additive 3	A	B	C	White ○

Marking

The last three digits in the order number define the lettering:

001-076	Standard Lettering
101-	Customized Lettering

Lettering - Aluminium / Plastic Material

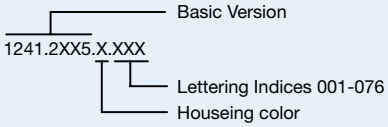

Lettering - Stainless Steel

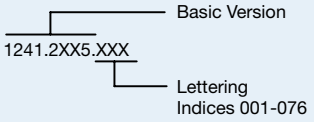

Lettering Colour of Laser Lettering

Material	Lettering Colour		
Stainless Steel	black	Filled letters	
Aluminum natural anodized	light grey	Filled letters	(only after customer approval)
Aluminum coloured anodized	light grey	Filled letters	

Order Index Lettering

Laser Marking			
001 =**A**	021 =**U**	041 =÷	061 =**EIN**
002 =**B**	022 =**V**	042 = ✳	062 =**AUS**
003 =**C**	023 =**W**	043 ==**=**	063 =**AUF**
004 =**D**	024 =**X**	044 = #	064 =**AB**
005 =**E**	025 =**Y**	045 = ↔	065 =**ON**
006 =**F**	026 =**Z**	046 = ↕	066 =**OFF**
007 =**G**	027 =**0**	047 = →	067 =**UP**
008 =**H**	028 =**1**	048 = ←	068 =**DOWN**
009 =**I**	029 =**2**	049 = ↓	069 =**HIGH**
010 =**J**	030 =**3**	050 = ↑	070 =**LOW**
011 =**K**	031 =**4**	051 = %	071 =**ON/OFF**
012 =**L**	032 =**5**	052 = √	072 =**START**
013 =**M**	033 =**6**	053 =**CTRL**	073 =**RESET**
014 =**N**	034 =**7**	054 =**RETURN**	074 =
015 =**O**	035 =**8**	055 =**SHIFT**	075 =
016 =**P**	036 =**9**	056 =**LOCK**	076 =
017 =**Q**	037 =**+**	057 =**STOP**	077 =
018 =**R**	038 =**-**	058 =**ENTER**	
019 =**S**	039 =**.**	059 =**BACK**	
020 =**T**	040 = x	060 =**LINE**	

Please note that the font size depends on the number of characters

All Variants

Mounting Diameter	Terminal	Housing Material, Torsion Protection	Colour of Housing	Actuator area	Illumination, LED	Config. Code	Order Number	
22	Flexible wire	Stainless Steel ,no	-	F	non-illuminated	PSE M 22 NO	1241.3004	
22	Flexible wire	Stainless Steel ,no	-	E	Point Illumination, green, 24 VDC	PSE M 22 NO PI	1241.3594.M	
22	Flexible wire	Aluminum ,yes	Alu natural	E	RI dotted, red, 24 VDC	PSE M 22 NO RI	1241.3256	■
22	Flexible wire	Aluminum ,yes	Alu natural	E	RI dotted, green, 24 VDC	PSE M 22 NO RI	1241.3257	■
22	Flexible wire	Aluminum ,yes	Alu natural	E	RI dotted, red / green, 24 VDC	PSE M 22 NO RI	1241.3258	■
22	Flexible wire	Aluminum ,yes	Alu natural	F	RI dotted, blue, 24 VDC	PSE M 22 NO RI	1241.3413	
22	Flexible wire	Aluminum ,no	Alu natural	F	RI homogeneous, RGB, 5 - 28 VDC	PSE M 22 NO RI	1241.3663	■
22	Flexible wire	Aluminum ,no	Alu natural	F	RI homogeneous, RGY, 5 - 28 VDC	PSE M 22 NO RI	1241.3664	■
22	Flexible wire	Stainless Steel ,no	-	E	RI homogeneous, RGB, 5 - 28 VDC	PSE M 22 NO RI	1241.3669	■
22	Plug Connector	Aluminum ,yes	Alu natural	E	RI dotted, red, 24 VDC	PSE M 22 NO RI	1241.3259	
22	Plug Connector	Aluminum ,yes	Alu natural	E	RI dotted, green, 24 VDC	PSE M 22 NO RI	1241.3260	
22	Plug Connector	Aluminum ,yes	Alu natural	E	RI dotted, red / green, 24 VDC	PSE M 22 NO RI	1241.3261	■
22	Quick Connect Terminal	Aluminum ,no	Alu natural	F	Point Illumination, red, 24 VDC	PSE M 22 NO PI	1241.3020.M	■
22	Quick Connect Terminal	Aluminum ,no	Alu natural	F	Point Illumination, yellow, 24 VDC	PSE M 22 NO PI	1241.3047.M	
22	Quick Connect Terminal	Aluminum ,no	Alu natural	F	Point Illumination, green, 24 VDC	PSE M 22 NO PI	1241.3089.M	
22	Quick Connect Terminal	Aluminum ,no	red	F	Point Illumination, red, 24 VDC	PSE M 22 NO PI	1241.3166.M	
22	Quick Connect Terminal	Aluminum ,no	Alu natural	F	Point Illumination, blue, 24 VDC	PSE M 22 NO PI	1241.3244.M	■
22	Pins	Aluminum ,no	red	F	non-illuminated	PSE M 22 NO	1241.3005	■
22	Pins	Aluminum ,no	green	F	non-illuminated	PSE M 22 NO	1241.3006	■
22	Pins	Aluminum ,no	black	F	non-illuminated	PSE M 22 NO	1241.3007	■
22	Pins	Aluminum ,no	Alu natural	F	non-illuminated	PSE M 22 NO	1241.3008	■
22	Pins	Stainless Steel ,no	-	F	non-illuminated	PSE M 22 NO	1241.3075	

Nut with gasket are enclosed in the box.

Other mounting diameters, materials, colors, connections, supply voltages possible available on request.
Special materials e.g. Marine grade stainless steel for use in salt and chlorinated environment on request.

The MOQ for standard laser lettering on standard variants is a packing unit.

5 VDC and 12 VDC RI variants on request (MOQ 500 pieces)

■ Most Popular.

Availability for all products can be searched real-time:https://www.schurter.com/en/Stock-Check/Stock-Check-SCHURTER

Legend:

Type: PSE

NO = normaly open

IV = prolonged signal

RU = PI = Point Illumination

RI = Ring Illumination

LE = Lettered

K = Plastics

Alu = Aluminium

ES = Stainless steel

F = Finger guidance

E = without finger guidance

Packaging unit 10 in box with insert or packed in air cushion bags





- Actuating elements in ESD safe packaging
- Screw nuts and sealing O-ring in a bag (enclosed in the box)

Accessories

	Description
	Connecting Terminal PSE Connecting Terminal
	Power Supply Power Supply IP42 for LED- and Illumination applications indoor 90~264 VAC => 24 VDC 0.34 A 8 W

22.12.2021

The specifications, descriptions and illustrations indicated in this document are based on current information. All content is subject to modifications and amendments. Information furnished is believed to be accurate and reliable. However, users should independently evaluate the suitability and test each product selected for their own applications.