Brand of NTN Group

Technical data

EXFLZ206

Bearing units



Grey cast housing, radial insert ball bearing with eccentric locking collar, seal with slinger

KIT CONTENT

EX206G2, FLZ206

VISUAL (S)

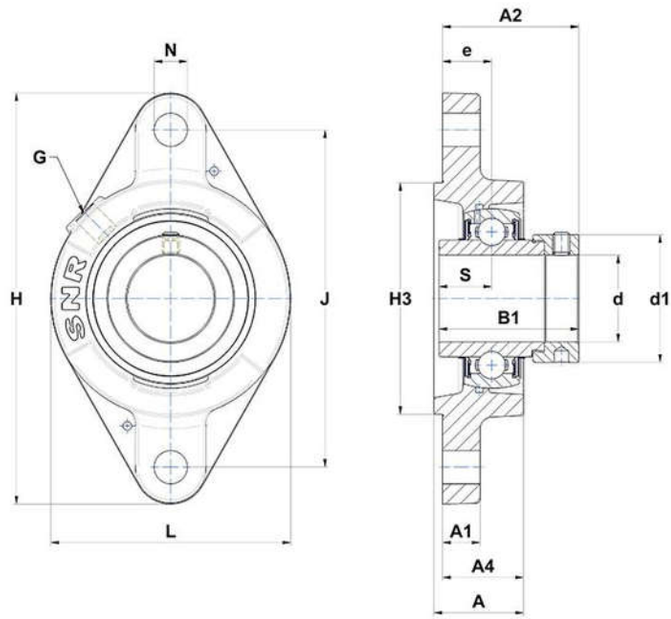

PRODUCT DEFINITION

Brand	SNR
A - Housing height	30 mm
A1 - Housing foot height / flange height	12 mm
A2 - Total height from mounting surface	47,1 mm
A4 - Housing height from mounting surface	27 mm
B - Width of Inner Ring	36,4 mm

PRODUCT DEFINITION	
B1 - Overall width Inner Ring	48,3 mm
d - Shaft diameter	30 mm
d1 - Outer dia of eccent. Lock. collar / nut of adapter sleeve	44,1 mm
e - Distance mounting surface to bearing center	17 mm
G - Grease fitting	R1/8"
H - Housing length, width or diameter	142 mm
H3 - Centering dia	80 mm
J - Mounting holes distance	116,5 mm
L - Housing width / diameter	83 mm
N - Mounting hole dimension	11,5 mm
S - Distance front side/bearing centre	18,2 mm

PRODUCT PERFORMANCE	
C - Dynamic load rating	19500000 mN
C0 - Static load rating	11200000 mN
Operating temperature min.	253,15 °K
Operating temperature max.	373,15 °K

OTHER FEATURES	
Mass	1,01 kg
Recommended tightening torque for set screw	11.5 N-m