MICRO (M12) Distribution Box - ASBV

Female Outlet 5 Pole - 4 Port Actuator/Sensor Distribution Box with Halogen-Free PUR Home Run Cable IP68, NEMA 6P and C-Track Rated



4 Port

FEMALE PORT FACE VIEW	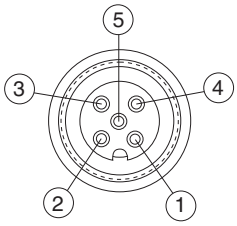
WIRING DIAGRAM 4 PORT 1 = BRN (C1) 3 = BLU (C3) 2 = GRY/PNK (1) RED/BLU (2) WHT/GRN (3) BRN/GRN (4) 4 = WHT (1) GRN (2) YEL (3) GRY (4) 5= GRN/YEL (gnd)	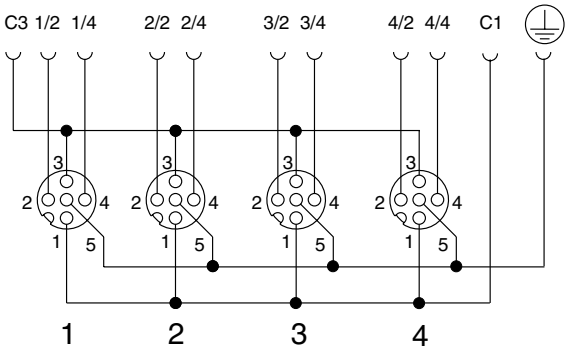

MICRO DISTRIBUTION BOX Ordering Information

PART NUMBER	ASBV 4 5-256/xx

Standard Cable Lengths: 5m and 10m

For Other Options, Contact Lumberg, Inc.

MICRO (M12) Distribution Box - ASBV

Female Outlet 5 Pole - 4 Port Actuator/Sensor Distribution Box with Halogen-Free PUR Home Run Cable IP68, NEMA 6P and C-Track Rated

TECHNICAL SPECIFICATIONS

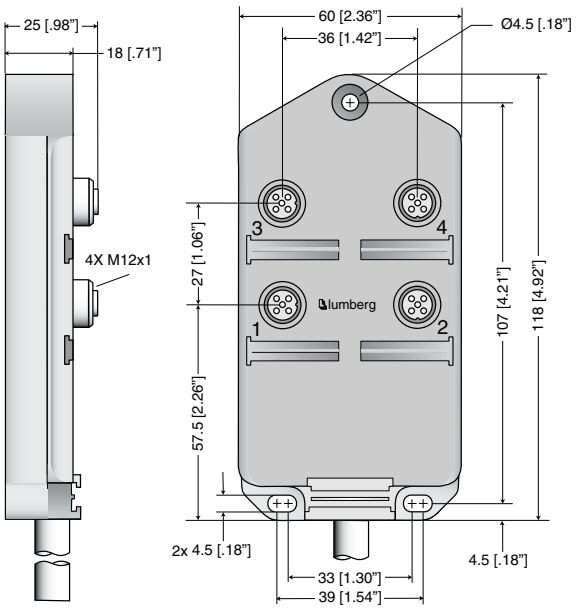

Mechanical

Housing:	PUR, Orange
Contact:	Brass, Gold over Nickel plated
Receptacle Housing:	Brass, Nickel plated
Insert:	Nylon

Electrical

Contact Resistance:	≤5mΩ
Current Rating:	4A/port and 12A/box
Voltage Rating:	250V

Environmental

Protection:	IP68, NEMA 6P *(Fully Locked Postion Only!)*
Operating Temperature:	-15°C to +90°C

Certifications

UL Recognized, File NO. E104696

CSA Certified, File NO. LR101546-1

Cable:

Voltage:	300V
256:	Halogen-Free, Black PUR jacket, Hi-flex bare, 8x0.50mm^2 and 3x1.0mm^2 copper stranding
Outside Diameter:	9.3mm/.366"