LCD time modules | Max. time range 99999.9 h (DC) | 198



The timer module of the type 198 with 6-digit LCD display for PCB mounting features a wide voltage range from 8 to 28 V DC.

It is extremely robust and suitable for many different applications thanks to its wide temperature range.

RoHS

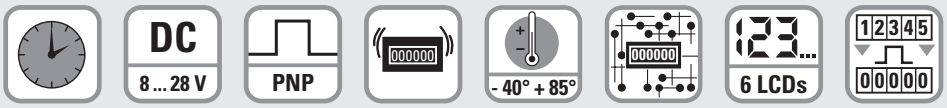

Timer | Power supply | Input type | High shock resistance | Temperature range | PCB mount | LCD display | Electrical reset

Powerful

- Display range up to 99999.9 hours.
- 6-digit LCD display, 5 mm high.
- Low power consumption.
- Wide voltage and temperature range.
- Very high shock and vibration resistance.

Simple

- Non-volatile memory (no battery).
- Start/Stop input.
- Electrical reset.
- Very high reliability.
- Small size and low cost.

Order specifications

Power supply	*Order no.*	*Delivery specification*
8 ... 28 V DC	**6.198.012.H00** [1]	· LCD counter module type 198 · Operating instructions

1) Stock types

© Fritz Kübler GmbH, subject to errors and changes. 11/2017

LCD time modules | Max. time range 99999.9 h (DC) | 198

Technical data

General technical data

Display	6 digits, LCD display, figure height 5 mm [0.20“]
Display range	99999.9 h
Data backup	CMOS EEPROM non-volatile memory up to 10 years (without battery)
Operating / working / storage temperature	-40°C ... +80°C [-40°F ... +185°F] (non-condensing)
Humidity	95 % RH at +32°C [+90°F] for max. 2 hours

Electrical characteristics

Power supply	8 ... 28 V DC
Current consumption	3 mA max. at 4.5 V DC 10 mA at 28 V DC
EMC standards	EN 55011 class B EN 61000-6-2, EN 61000-6-3 EN 61326-1, EN 61326-3-1

The module must be protected against inductive voltage spikes and high energy noise interference.

Mechanical characteristics

Housing	dimensions	18.4 x 32.4 mm [0.72 x 1.28“]
	color	black
Weight		approx. 8 g [0.28 oz]
Vibration resistance acc. to DIN-IEC 68-2-6		10 ... 80 m/s², 10 ... 75 Hz

Inputs

Start/Stop input		8 ... 28 V DC
(Enable input timer)		
On-times smaller than 16 sec will not be counted		
Reset input		8 ... 28 V DC
	pulse length	min. 500 ms

Terminal assignment

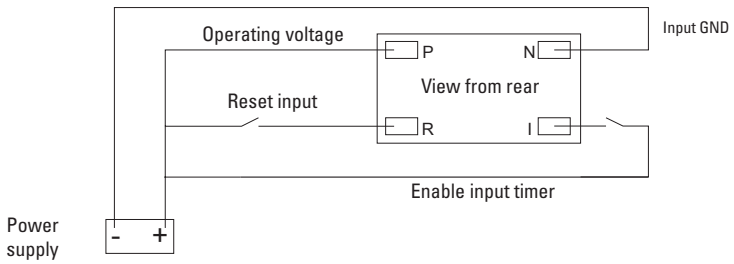

Dimensions

Dimensions in mm [inch]

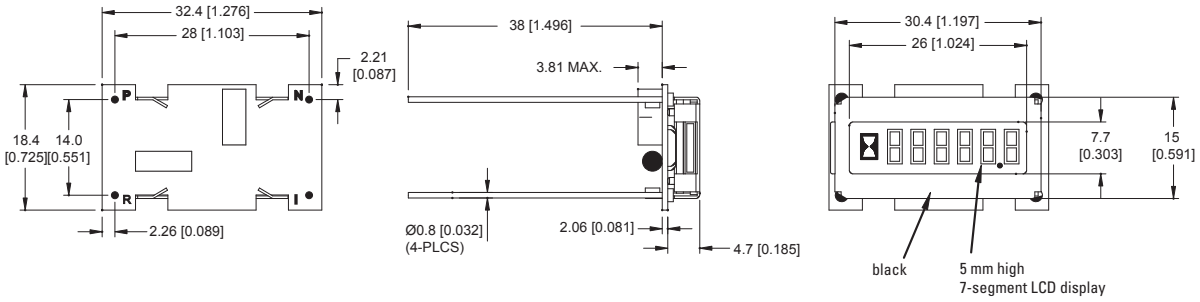

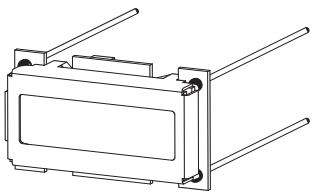

© Fritz Kübler GmbH, subject to errors and changes. 11/2017