Photo-electric sensors

OsiSense XU Application, single mode
food and beverage processing series
Stainless steel 316 case, M12 connector
DC

Compact design

ECOLAB certified

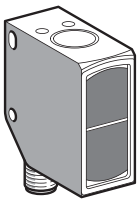

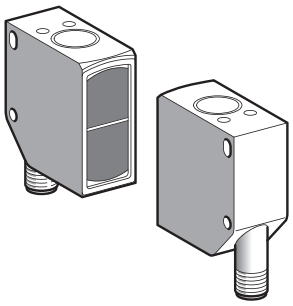

System	**Diffuse with background suppression**	**Polarised reflex**	**Thru-beam**	
Type of transmission conforming to EN 62471 (2008)	Red beam			
Nominal sensing distance (Sn)/Maximum sensing distance	3…550 mm, on white 90% 12…550 mm, on grey 18% 20…550 mm, on black 6% *(1), (2)*	0.4…11/13 m (with reflector XUZ C100) 0.4…9 m (with reflector XUZ C80) 0.4…6 m (with reflector XUZ C50)	0…15/20 m	

References

4-wire, PNP	**XUK 8SPSMM12**	**XUK 9SPSMM12**	Transmitter: **XUK 2SKSMM12T**	Receiver: **XUK 2SPSMM12R**
Weight (kg)	0.150	0.150	0.150	0.150

Characteristics

Product certifications		CE			
Connection		M12, 4-pin connector			
Degree of protection	Conforming to IEC 60529	IP 67			
	Conforming to DIN 40050	IP 69K			
Ambient air temperature	For operation	-20…+60 °C (100 °C for cleaning and sterilization phases whilst not in service)			
	For storage	-20…+80 °C			
Materials	Case	Stainless steel 316L			
	Lenses	PMMA			
Vibration resistance	Conforming to EN/IEC 60947-5-2 and EN/IEC 60947-4-2	Amplitude ±0.5 mm (f = 10 to 55 Hz)			
Shock resistance	Conforming to EN/IEC 60947-5-2 and EN/IEC 60947-4-1	30 gn, duration 11 ms			
Indicator lights	Output state	Yellow LED	Yellow LED	–	Yellow LED
	Supply on	Green LED			
	Unstable	Yellow LED, flashing			Red LED
Rated supply voltage		10…30 V ⎓			
Voltage limits (including ripple)		±10% of rated operational voltage			
Current consumption, no-load		< 30 mA			
Switching capacity		⩽ 100 mA, with protection against reverse polarity, overload and short-circuit			
Test function	Breaking red beam	–	–	Yes	–
Voltage drop, closed state		⩽ 2.4 V			
Maximum switching frequency		400 Hz	600 Hz	–	500 Hz
Delays	First-up	< 300 ms			
	Response	1.2 ms	0.8 ms	–	1 ms
	Recovery	1.2 ms	0.8 ms	–	1 ms

(1) Sensing distance adjustable between 100 and 550 mm.
(2) % of object remission.

Photo-electric sensors

OsiSense XU Application, single mode
food and beverage processing series
Stainless steel 316 case, M12 connector
DC

References of accessories



XUZ C80

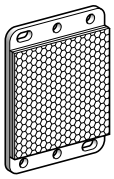

XUZ C50/XUZ C50CR

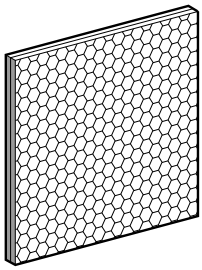

XUZ C100

Description	Dimensions	Reference	Weight kg
Fixing bracket stainless steel 316	–	**XUZ A51S**	0.050
Reflector	100 x 100 mm	**XUZ C100**	0.062
Standard reflector	Ø 80 mm	**XUZ C80**	0.029
Universal reflector	50 x 50 mm	**XUZ C50**	0.020
Reflector *(1)* ▲ resistant to ECOLAB® detergents, up to 140 °C	50 x 50 mm	**XUZ C50CR**	0.020
Pre-wired connector, straight PVC cable M12, 4-pin, female connector, stainless steel clamping ring	5 m	**XZC PA1141L5**	0.210
Pre-wired connector, elbowed PVC cable M12, 4-pin, female connector, stainless steel clamping ring	5 m	**XZC PA1241L5**	0.210

(1) Sensing distances are reduced by 50% compared to reflector XUZ C50.
▲ Available: 2nd half 2011.

Optical curves, excess gain curves

XUK 8SPSMM12

Scanning properties

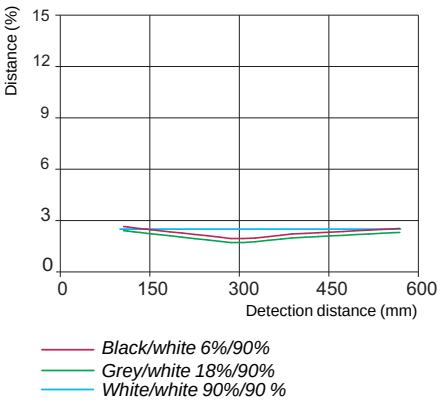

Size of luminous point

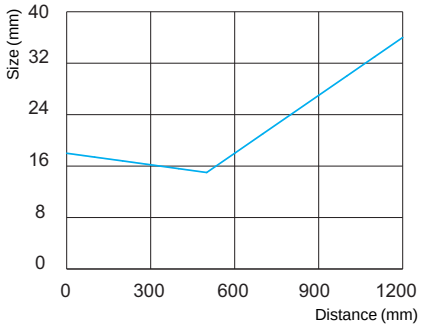

XUK 9SPSMM12

Excess gain curve

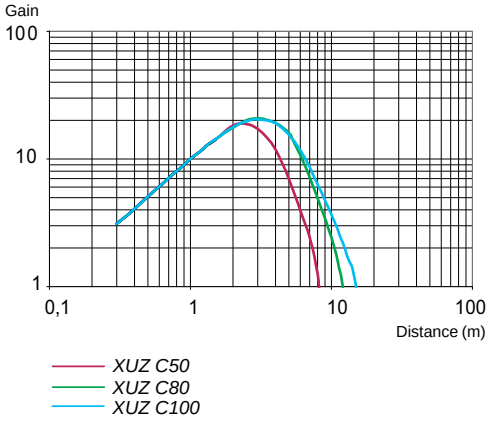

Size of luminous point

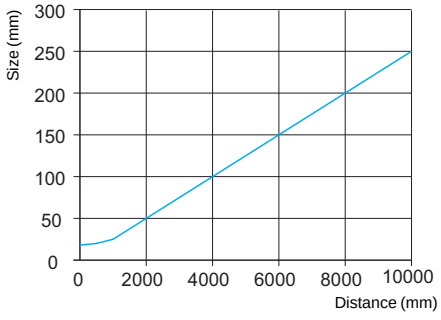

Photo-electric sensors
OsiSense XU Application, single mode
food and beverage processing series
Stainless steel 316 case, M12 connector
DC

Optical curves, excess gain curves *(continued)*

XUK 2SKSMM12T and **XUK 2SPSMM12R**

Excess gain curve

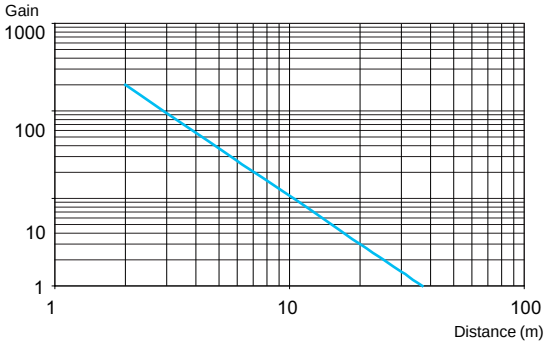

Size of luminous point

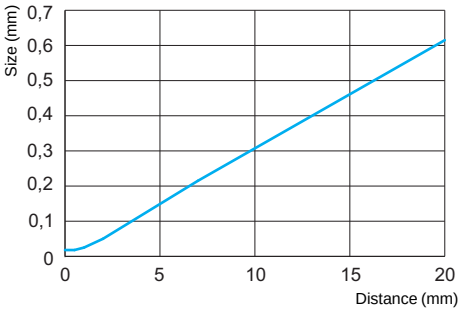

Wiring schemes

M12 connector



XUK 8SPSMM12,
XUK 9SPSMM12,
XUK 2SPSMM12R:

1 BN: Brown (+)
2 WH: White (ET/Lock) *(1)*
3 BU: Blue (-)
4 BK: Black (Output)

XUK 2SKSMM12T:

1 BN: Brown (+)
2 WH: White (Test input)
3 BU: Blue (-)
4 BK: Black (pin not connected)

PNP receiver

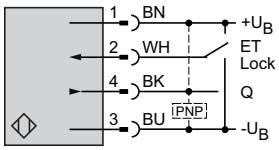

Thru-beam transmitter ⎓

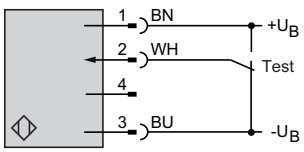

(1) ET/Lock. ET: External Teach, Lock: pushbutton locking.

Photo-electric sensors

OsiSense XU Application, single mode
food and beverage processing series
Stainless steel 316 case, M12 connector
DC

Dimensions

Sensors

XUK 8SPSMM12 and **XUK 9SPSMM12**

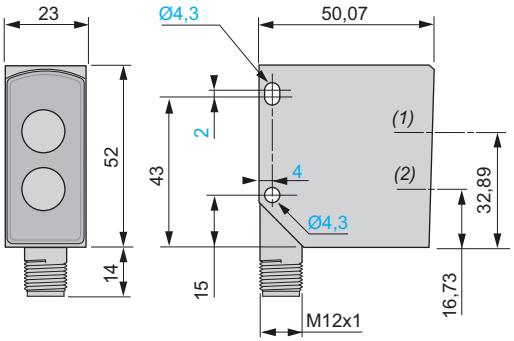

XUK 2SKSMM12T and **XUK 2SPSMM12R**

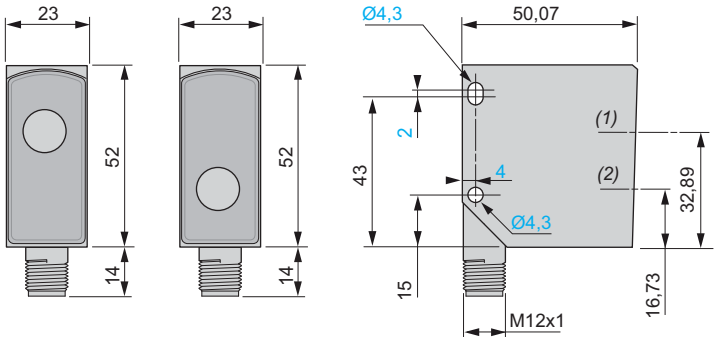

(1) Receiver optical axis.
(2) Transmitter optical axis.

Reflectors

XUZ C80

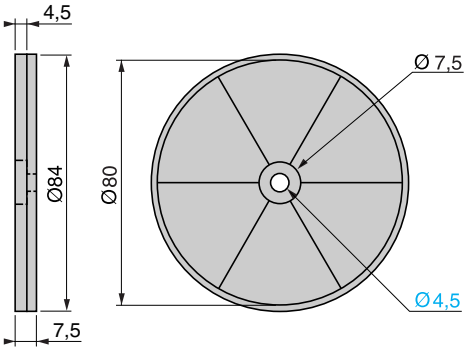

XUZ C100

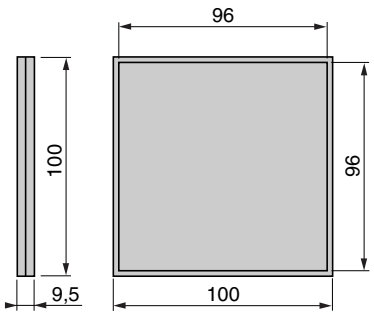

XUZ C50 and **XUZ C50CR**

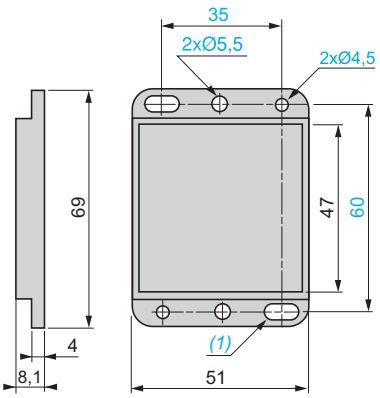

(1) 2 elongated holes for M4 screws.

Fixing bracket

XUZ A51S

