Plastic sleeve

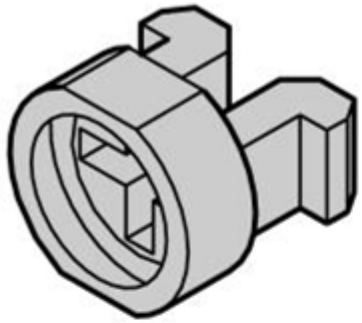

Part no.: 21100-591

Features:

- Sleeve is inserted into the elongated hole of the front panel
- Sleeve serves to guide the collar screw when fastening the front panel

Technical information:

Description	Qty/PU
Plastic sleeve, PA, black	100 piece

Delivery comprises:

Item	Qty	Description
1	100	Sleeve, PA, UL V-2, grey; for form hole 5.9 x 3.3 mm

Note:

- Metal sleeves on the front panels must be pressed in.
- not for front panel 2 HP