Connection leads

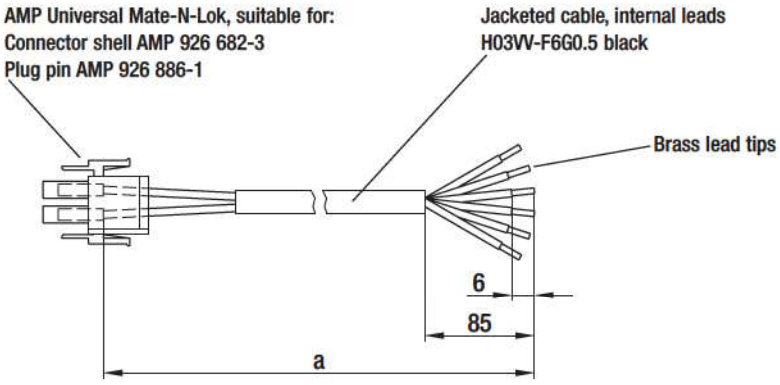

- **Suitable for:**
  D2E140-HR; D2E146-KA; D2E146-KB;
  D2E146-HR; D2E146-HS; D2E146-HT;
  D2E160-FI; D2E160-FK
- **Plug assignment:**
  1 = Step 1 (white)
  2 = Step 2 (red)
  3 = Step 3 (grey)
  4 = Step 4 (black)
  5 = N (blue)
  6 = PE (green/yellow)

Lead connections for centrifugal blowers

Part no.	a
21956-4-1040	300.0
21957-4-1040	450.0
21958-4-1040	650.0
21959-4-1040	1000.0

subject to alterations

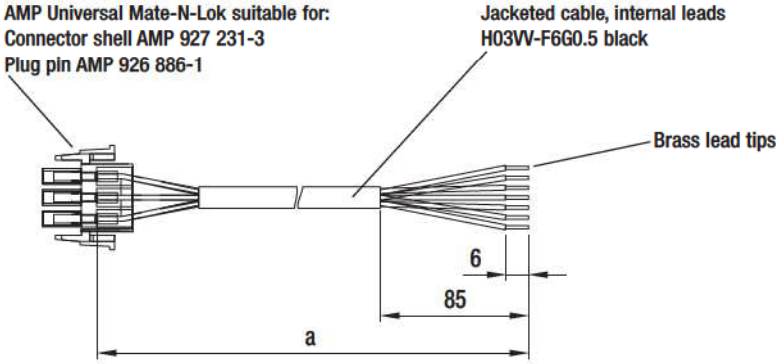

- **Suitable for:**
  D4E146-LV; K4E146-AB
- **Plug assignment:**
  1 = Step 1 (white)
  2 = Step 2 (red)
  3 = Step 3 (grey)
  4 = Step 4 (orange)
  5 = Step 5 (black)
  8 = N (blue)
  9 = PE (green/ yellow)

Lead connections for centrifugal blowers

Part no.	a
21810-4-1012	450.0
21811-4-1012	1050.0
21812-4-1012	1300.0
21813-4-1012	1600.0
21814-4-1012	2300.0

subject to alterations