Brand of NTN corporation

Technical data

UCP311-35

Bearing units



Grey cast housing, radial insert ball bearing with socket set screws,seal with slinger

KIT CONTENT

UC311-35G2, P311

VISUAL (S)

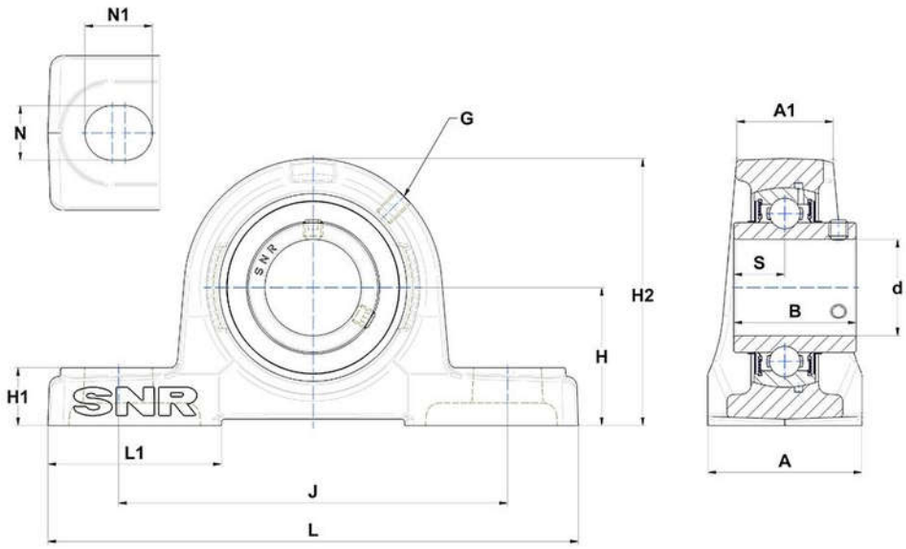

PRODUCT DEFINITION

Brand	SNR
A - Housing width	80 mm
A1 - Housing top width	51 mm
B - Width of Inner Ring	66 mm
d - Shaft diameter	55,563 mm
G - Grease fitting	M6x1

UCP311-35
Bearing units

PRODUCT DEFINITION	
H - Distance mounting base to centerline spheric. seating diam.	80 mm
H1 - Housing foot height	30 mm
H2 - Housing height	154 mm
J - Mounting holes distance	236 mm
L - Housing length	310 mm
L1 - Housing foot length	85 mm
N - Mounting hole dimension	20 mm
N1 - Mounting hole length	38 mm
S - Distance front side/bearing centre	25 mm

PRODUCT PERFORMANCE	
C - Dynamic load rating	71500000 mN
C0 - Static load rating	44800000 mN
Operating temperature min.	253,15 °K
Operating temperature max.	373,15 °K

OTHER FEATURES	
Mass	7,47 kg
Recommended tightening torque for set screw	27.1 N-m