E30444

IO-Link repeater

IO-LINK REPEATER

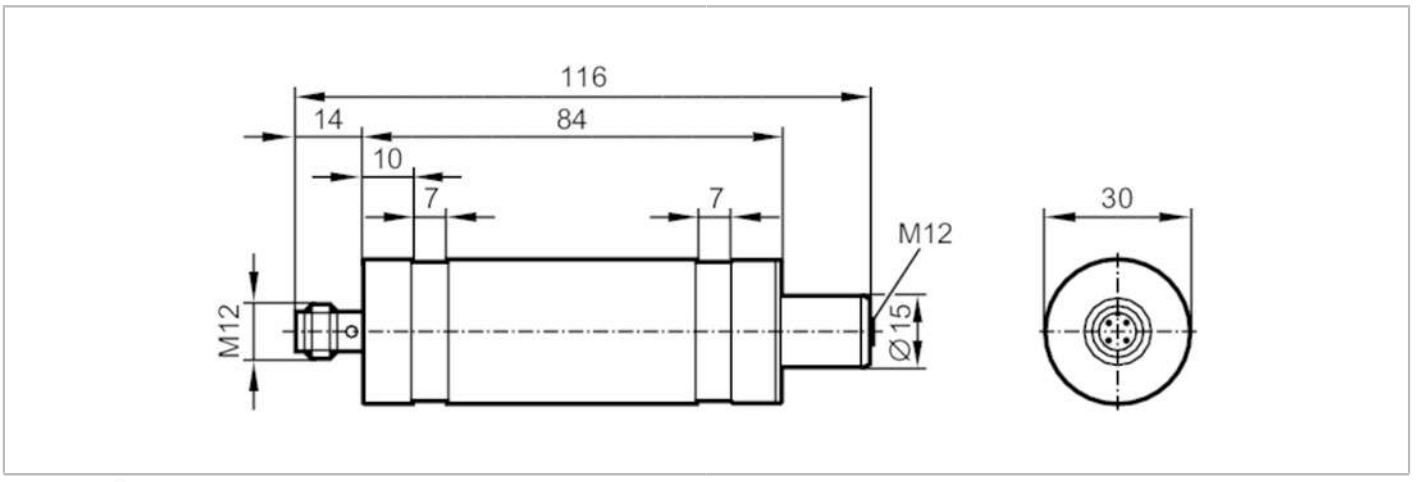

Application			
Special feature		Gold-plated contacts	
Electrical data			
Operating voltage	[V]	18...30 DC	
Nominal voltage DC	[V]	24	
Current consumption	[mA]	< 20	
Protection class		III	
Reverse polarity protection		yes; (on the master side)	
Overvoltage protection		yes; (integrated)	
Surge protection for voltage		between L-, pin 5 and ground	between L+, signal cables and ground
		Umax = 45 V for surge	Umax = 90 V for surge
		Umin = 30 V for normal operation	Umin = 60 V for normal operation
Surge protection for current		surge current	leakage current
		Imax = 25 A	Imax = 10 µ
Power-on delay time	[s]	< 2; (per repeater)	
Current rating per port	[A]	0.84; (Port Class A; Port Class B: 2)	
Delay time acyclic data		up to 2 cycles; (per repeater)	
Delay time process data		up to 1 cycle; (per repeater)	
Interfaces			
Communication interface		IO-Link	
Unterstützte IO-Link Revision		1.0; 1.1	
Unterstützte Masterportklasse		A / B	
Transmission type		COM1 (4,8 kBaud); COM2 (38,4 kBaud); COM3 (230,4 kBaud)	
SDCI standard		IEC 61131-9	
SIO mode		no	
Operating conditions			
Ambient temperature	[°C]	-25...65	
Storage temperature	[°C]	-40...85	
Protection		IP 68; IP 69K; (7 days / 3 m water depth / 0.3 bar: IP 68)	

E30444

IO-Link repeater

IO-LINK REPEATER

Tests / approvals			
EMC		DIN EN 61000-6-2	
		DIN EN 61000-6-4	in plastic or open metal tanks
Shock resistance		DIN EN 60068-2-27	50 g (11 ms)
Vibration resistance		DIN EN 60068-2-6	20 g (10...2000 Hz)
MTTF	[years]	409	
UL approval		File number UL	E205959

Mechanical data		
Weight	[g]	212
Materials		stainless steel (316L/1.4404); PEI; PA reinforced fibre; FKM; Grounding clamp: stainless steel (304/1.4301)

Displays / operating elements		
Display		1 x LED
	operation	green
	IO-Link	green
	fault	red

Remarks	
Remarks	For information on the maximum cable length please refer to the operating instructions.
	functional grounding via premounted grounding clamp
	for further information please see the operating instructions
Pack quantity	1 pcs.

Electrical connection

Electrical connection - plug

Connector: 1 x M12; coding: A; Contacts: gold-plated

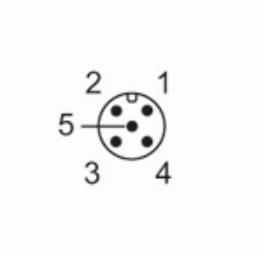

E30444

IO-Link repeater

IO-LINK REPEATER

Connection

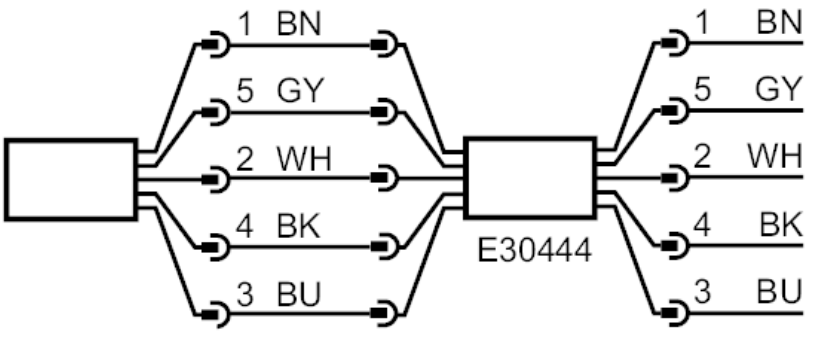

BK:	black
BN:	brown
BU:	blue
WH:	white
GY:	grey
	colours to DIN EN 60947-5-2

Port Class A

1	L+
2	bridged , electrically isolated
3	L-
4	C: IO-Link
5	bridged , electrically isolated

Port Class B

1	L+
2	P24
3	L-
4	C: IO-Link
5	N24

Electrical connection - socket

Connector: 1 x M12; coding: A; Contacts: gold-plated

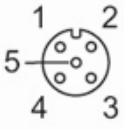

Port Class A

1	L+
2	bridged , electrically isolated
3	L-
4	C: IO-Link
5	bridged , electrically isolated

E30444

IO-Link repeater

IO-LINK REPEATER

Port Class B	
1	L+
2	P24
3	L-
4	C: IO-Link
5	N24