# Product Data Sheet

**9295414301**
VWS0143XULCS
6424

ebmpapst
The engineer's choice



GREEN TECH

**6424**

**INDEX**

**1 General ..... 3**
**2 Mechanics ..... 3**
2.1 General ..... 3
2.2 Connections ..... 3
**3 Operating Data ..... 4**
3.1 Electrical Operating Data ..... 4
3.2 Electrical Features ..... 5
3.3 Aerodynamics ..... 6
3.4 Sound Data ..... 7
**4 Environment ..... 7**
4.1 General ..... 7
4.2 Climatic Requirements ..... 7
4.3 EMC ..... 7
**5 Safety ..... 8**
5.1 Electrical Safety ..... 8
5.2 Approval Tests ..... 8
**6 Reliability ..... 8**
6.1 General ..... 8

## 1 General

| | | |
|---|---|---|
| Fan type | Fan | |
| Rotating direction looking at rotor | Counterclockwise | |
| Airflow direction | Air outlet over struts | |
| Bearing system | Ball bearing | |
| Mounting position - shaft | Any | |

## 2 Mechanics

### 2.1 General

| | | |
|---|---|---|
| Width | 150,0 mm | |
| Depth | 51,0 mm | |
| Diameter | 172,0 mm | |
| Mass | 0,760 kg | |
| Housing material | Metal | |
| Impeller material | Plastic | |
| Max. torque when mounted across both mounting flanges<br>Screw size | Wire outlet corner: 260 Ncm<br>Remaining corners: 260 Ncm<br>ISO 4762 - M4 degreased, without an additional brace and without washer | |

### 2.2 Connections

| | | |
|---|---|---|
| Electrical connection | Plug | |
| Lead wire length<br>Tolerance | See drawing | |
| Plug | See drawing | |
| Contact | See drawing | |

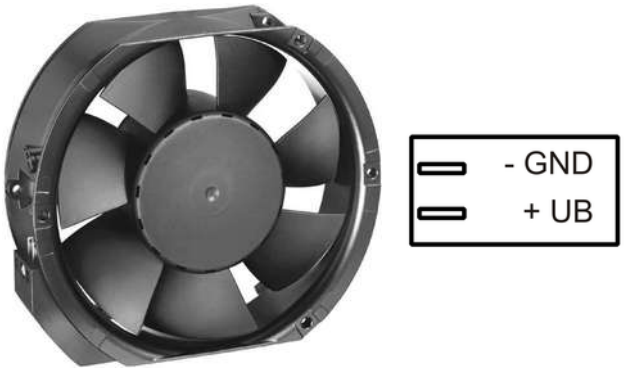

## 3 Operating Data

### 3.1 Electrical Operating Data

Measurement conditions: Normal air density = 1,2 kg/m3; Temperature 23℃ +/ - 3℃; Motor axis horizontal; warm-up time before measuring 5 minutes (unless otherwise specified). In the intake and outlet area should not be any solid obstruction within 0,5 m.

Δp = 0: corresp. to free air flow (see chapter aerodynamics)
I: corresp. to arithm. mean current value
No inrush current means: Inrush current is mainly affected by length and kind of connecting line 120uF

| Features | Condition | Symbol | Values | | |
|---|---|---|---|---|---|
| Voltage range | | U | 12 V | | 28 V |
| Nominal voltage | | $U_N$ | | 24 V | |
| Power consumption<br>Tolerance | Δp = 0<br>0010 | P | 3,1 W<br>+- 25 % | 17 W<br>+- 25 % | 26 W<br>+- 20 % |
| Current consumption<br>Tolerance | Δp = 0<br>0010 | I | 260 mA<br>+- 25 % | 710 mA<br>+- 25 % | 755 mA<br>+- 20 % |
| Speed<br>Tolerance | Δp = 0<br>0010 | n | 1.750 1/min<br>+- 10 % | 3.400 1/min<br>+- 10 % | 3.850 1/min<br>+- 10 % |
| Starting current consumption | | | | 4.000 mA | |

### 3.2 Electrical Features

| | | |
|---|---|---|
| Electronic function | None | |
| Reversed polarity protection<br>Max. residual current at $U_N$ | Rectifying diode<br>$I_F$ <= 10 mA | |
| Locked rotor protection | Auto restart | |
| Locked rotor current at $U_N$ | $I_{block}$ approx. 4.000 mA | |
| Clock signal at locked rotor | $t_3$ / $t_4$ typical: 1,4 s / 5,3 s | |

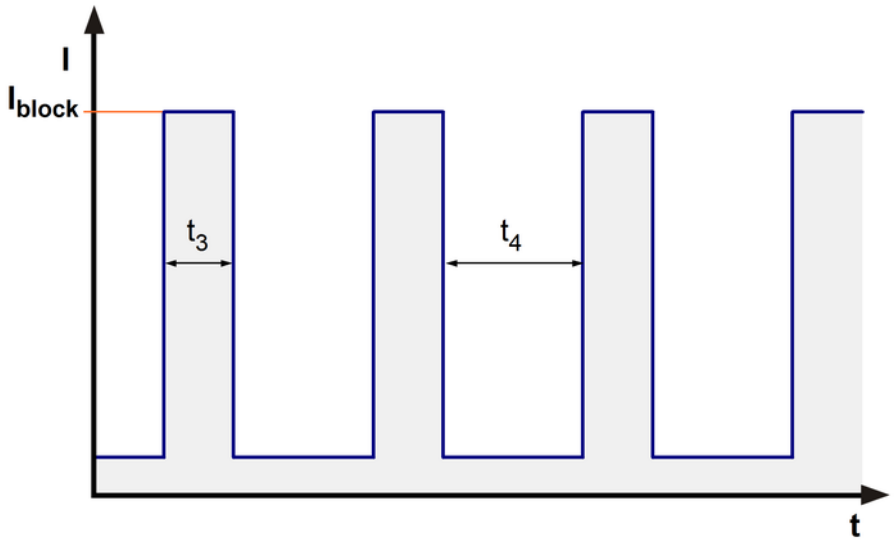

### 3.3 Aerodynamics

| | |
|---|---|
| Measurement conditions: | Measured with a double chamber intake rig acc. to DIN EN ISO 5801.<br>Normal air density = 1,2 kg/m3; Temperature 23℃ +/ - 3℃;<br>In the intake and outlet area should not be any solid obstruction within 0,5 m. Motor shaft horizontal.<br>The information is only valid under the specified test conditions and may be changed by the installation conditions. If there are deviations from the standard test conditions, the characteristic values must be checked under the installed conditions. |

a.) Operation condition:

| |
|---|
| 3.400 1/min at free air flow |

| | | |
|---|---|---|
| Max. free-air flow (Δp = 0 / V̇ = max.) | 390,0 m3/h | |
| Max. static pressure (Δp = max. / V̇ =0) | 188 Pa | |

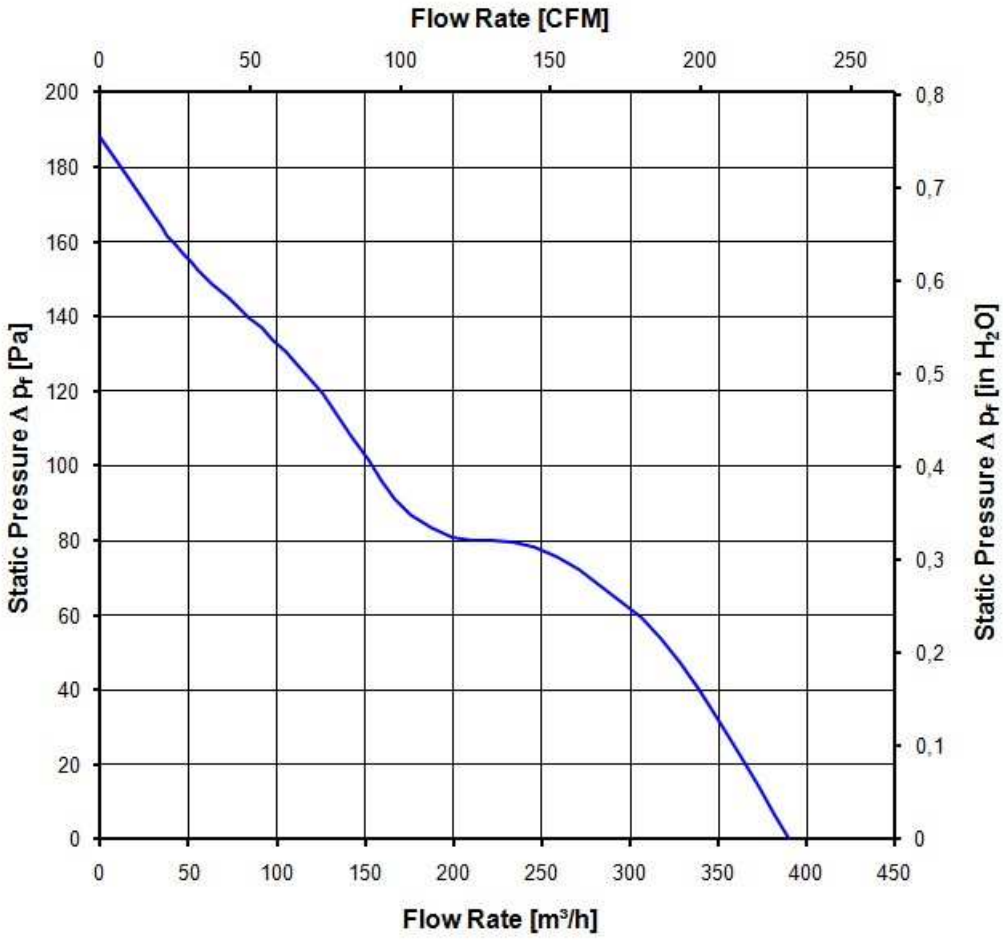

### 3.4 Sound Data

| | |
| --- | --- |
| Measurement conditions: | Sound pressure level: 1 meter distance between microphone and the air intake.<br>Sound power level: Acc. to DIN 45635 part 38 (ISO 10302)<br>Measured in a semianchoic chamber with a background noise level of Lp(A) < 5 dB(A)<br>For further measurement conditions see chapter aerodynamics. |

a.) Operation condition:

| |
| --- |
| 3.400 1/min at free air flow |

| | | |
| --- | --- | --- |
| Optimal operating point | 275,0 m3/h @ 61 Pa | |
| Sound power level at the optimal operating point | 6,4 bel(A) | |
| Sound pressure level at free air flow, measured in rubber bands | 55,0 dB(A) | |

## 4 Environment

### 4.1 General

| | | |
| --- | --- | --- |
| Min. permitted ambient temperature TU min. | -20 ℃ | |
| Max. permitted ambient temperature TU max. | 72 ℃ | |
| Min. permitted storage temperature TL min. | -40 ℃ | |
| Max. permitted storage temperature TL max. | 80 ℃ | |

### 4.2 Climatic Requirements

| | | |
| --- | --- | --- |
| Humidity requirements | humid heat, constant; according to DIN EN 60068-2-78, 14 days | |
| Water exposure | None | |
| Dust requirements | None | |
| Salt fog requirements | None | |

Permitted application area:
The product is intended for use in sheltered rooms with controlled temperature and controlled humidity. Directly exposure to water must be avoided.

Pollution degree 1 (according DIN EN 60664-1)
There is either no pollution or it occurs only dry, non-conductive pollution. The pollution has no negative impact.

Please require severity levels and specification parameters from the responsible development departments.

### 4.3 EMC

| **Kind** | **Electrostatic Discharge Immunity Test** |
| --- | --- |
| According | DIN EN 61000-4-2:2001-12 |
| Ceck accuracy / Limit | Contact Discharge +/- 4 kV; Air Discharge +/- 8 kV |
| Result | A: The monitored function operates as designed during and after exposure to a disturbance. |

## 5 Safety

### 5.1 Electrical Safety

| | | |
|---|---|---|
| Dielectric strength<br>DIN EN 60950 (VDE 0805) and DIN EN 60335 (VDE 0700)<br>A.) Type test<br>Measuring conditions: After 48h of storage at 95% R.H. and 25℃.<br>No arcing or breakdown is allowed!<br>All connections together to ground.<br>B.) Routine test<br>Measuring conditions: At indoor climate.<br>No arcing or breakdown is allowed!<br>All connections together to ground. | 500 VAC / 1 Min.<br><br>850 VDC / 1 Sec. | |
| Isolation resistance<br>Measuring conditions: After 48h of storage at 95% R.H. and 25℃ measured with U=500 VDC for 1 min. | RI > 10 MOhm | |
| Clearance / creepage distance | 1,0 mm / 1,2 mm | |
| Protection class | III | |

### 5.2 Approval Tests

| | | |
|---|---|---|
| CE | EC Declaration of Conformity | Yes |
| EAC | Eurasian Conformity | Yes |
| UL | Underwriters Laboratories | Yes / UL507, Electric Fans E38324 |
| VDE | Association for Electrical, Electronic and Information Technologies | Yes / Approval acc. to EN 60950 (VDE 0805) - Information technology equipment |
| CSA | Canadian Standards Association | Yes / C22.2 No. 113 Fans and Ventilators |
| CCC | China Compulsory Certification | Not applicable |

## 6 Reliability

### 6.1 General

| | | |
|---|---|---|
| Life expectancy L10 at TU = 40 ℃ | 75.000 h | |
| Life expectancy L10 at TU max. | 35.000 h | |
| Life expectancy L10 acc. to IPC 9591 at TU = 40 ℃ | 127. 500 h | |

Copying of this document, and giving it to others and the use or communication of the contents thereof, are forbidden without express authority. Offenders are liable to the payment of damages. All rights are reserved in the event of the grant of a patent or the registration of a utility model or design.

Schutzvermerk nach DIN ISO 16016 beachten/
Refer to protection notice DIN ISO 16016!

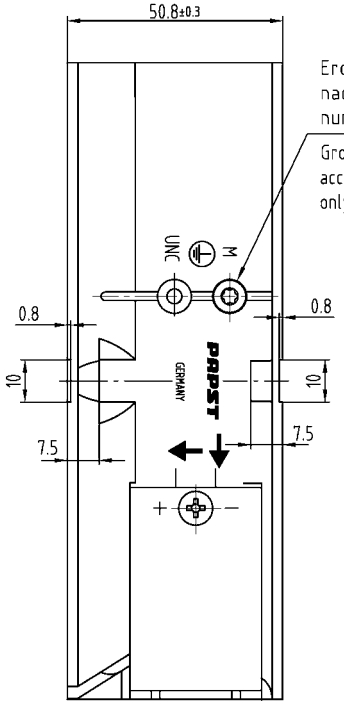


Ⓙ

Erdungsschraube Duo-Taptite
nach DIN 7500, CM 4x8, Torx
nur, wenn in Unterstückliste enthalten.

Grounding screw Duo-Taptite
according to DIN 7500, CM 4x8, Torx
only, if contained in sub-bill of material.

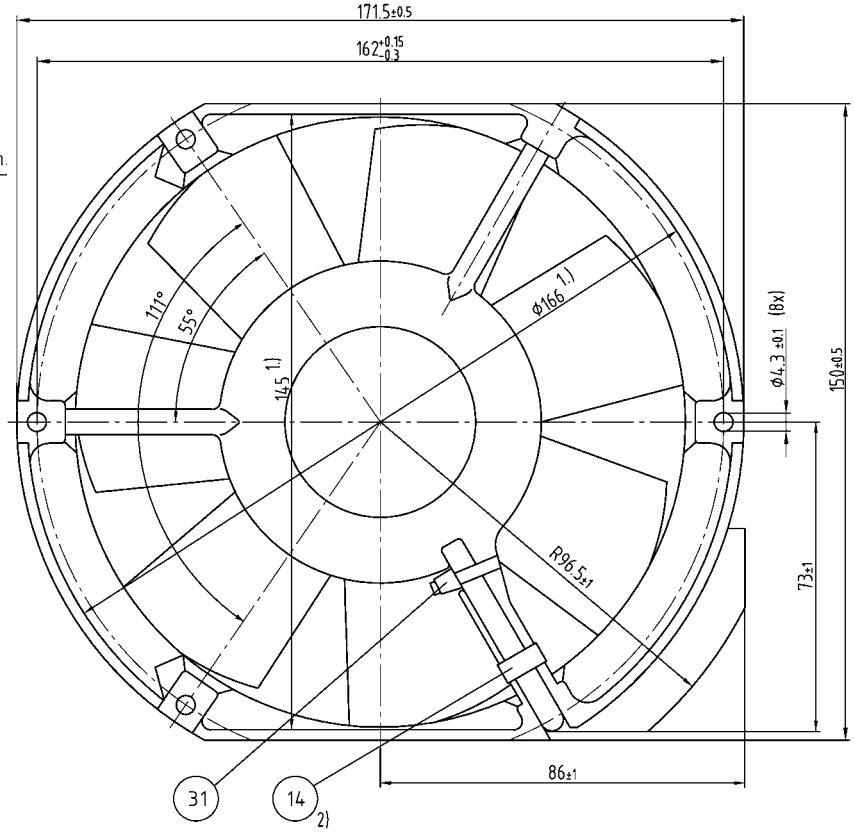


Maße für Steckeranschluss
dimensions for plug connector

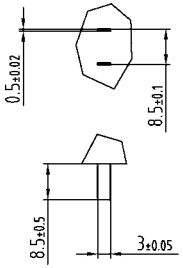


- Axialspiel: mit Feder spielfrei verspannt
1) Maße für Montagewand
2) nur, wenn in Stückliste enthalten

- without axial clearance by a pre-loaded spring
1) dimensions for assembly wall
2) only, if contained in bill of material

| | | | | | |
|---|---|---|---|---|---|
| | | | ebmpapst | Werkstoff/Material: | Volumen/Volume [mm³]: |
| SAP-Status/State | Aend.-Nr./Change-No. | AutoCAD-System-Version | CAD-Umgebung/ CAD-Environment | | Gewicht/Mass (g): |
| | | Datum/Date | Name/Name | | |
| | | Bearb./ Drawn | | Artikel/Title | |
| Tolerierung/Tolerances: | | Gepr./ Checked | | | |
| Allgemeintoleranzen/Gen. tolerances: | | Freig./ Releas. | | | |
| | | ebmpapst | | Zchg.-Nr./ Drawing.-No.: | Ers.f.Zchg./ Replaces: |
| | | ebm-papst St. Georgen GmbH & Co. KG | | Dokumenttyp/Type of Document / Teildokument (Blatt/Page) / Index/Index / Format/Size: / Massstab/scale | |

11/09