LT 9702® WR
high-output mid/high loudspeaker

TECHNICAL DATA SHEET

Key Features

- **90° x 70°** coverage for short-throw applications in auditoriums, worship facilities, performing arts centers, stadiums and arenas
- **Mid/high-frequency** loudspeaker designed for use in arrays with separate LF augmentation (Bose® MB12 or MB24 bass arrays) or voice-only applications
- **Bose V2 midrange manifold** sums output of 2 x 4.5" (114 mm) extended-range cone drivers for lower breakup distortion and improved transient response. Provides a smoother, more natural vocal range compared to single 8" to 12" woofers. The LT 9702 WR loudspeaker utilizes two Bose V2 midrange manifolds
- **Bose large-format waveguide** provides effective 90° x 70° pattern control to approximately 250 Hz (horizontal) and 500 Hz (vertical). Minimizes loudspeaker overlap in arrays to reduce comb-filter interference and improve intelligibility



Product Overview

The Bose® LT 9702® WR is a high-output, mid/high-frequency loudspeaker designed for use with other LT loudspeakers to form Coherent Zone arrays in medium to large permanent installations requiring precise coverage and high intelligibility. The large-format waveguide and 90° x 70° pattern provide a cost-effective alternative to multiple-cabinet line arrays for many applications.

Technical Specifications

System Performance			
Frequency Response (+/-3 dB)[1]	220 Hz - 16 kHz		
Frequency Range (-10 dB)[1]	170 Hz - 18 kHz		
Nominal Dispersion	90° H x 70° V		
Sensitivity (SPL / 1 W @ 1 m)[2]	105 dB SPL		
Maximum SPL @ 1 m[3]	126 dB SPL (132 dB SPL peak)		
Crossover Type	Passive, Bi-Amp, Switchable		
Crossover Frequency	1.6 kHz		
Recommended High-Pass Filter	170 Hz with 4th order filter (24 dB / octave)		
Loudspeaker EQ	Required		
	Passive	**Bi-Amp**	
		Mid	**High**
Long-Term Power Handling[4]	140 W (560 W peak)	140 W (560 W peak)	75 W (300 W peak)
Nominal Impedance	8 Ω	8 Ω	8 Ω
Transducers			
Driver Compliment	HF: 3" (76 mm) voice coil compression driver MF: Two (2) Bose V2 midrange manifolds, each with 2 x 4.5" (114 mm) cone drivers		
Physical			
Enclosure	Exterior-grade Baltic birch plywood, 11-ply, 15 mm		
Finish	Two part spray polyurethane coating, black		
Grille	16-gauge perforated stainless steel grille with powder-coated finish and backed with an open-cell foam		
Environmental	Outdoor per IEC 529 IPX5[5]		
Connectors	Two (2) parallel-wired NL4 Neutrik® Speakon® connectors		
Suspension / Mounting	Sixteen (16) points SAE 3/8" - 16 threaded inserts (4 each: top, bottom, sides), stainless steel		
Dimensions	34.6" H x 22.5" W x 17.8" D (879 mm x 572 mm x 451 mm)		
Net Weight	93 lb (42.3 kg)		
Shipping Weight	116 lb (52.6 kg)		
Product Code			
Black	323112-0110		

Footnotes:

1 Frequency response and range measured on-axis with recommended active EQ in an anechoic environment.
2 Sensitivity measured in free field (no boundary-loading gain) with recommended active EQ, referenced to 1W/1m.
3 Maximum SPL calculated from sensitivity and power handling specifications, exclusive of power compression.
4 Power handling tested using pink noise filtered to meet IEC 268-5, 6 dB crest factor, 100 hours, with recommended EQ.
5 LT WR Loudspeaker must be mounted vertically for outdoor installations. Horizontal position (rotated 90 degrees) for indoor installations only.

Directivity Index and Q

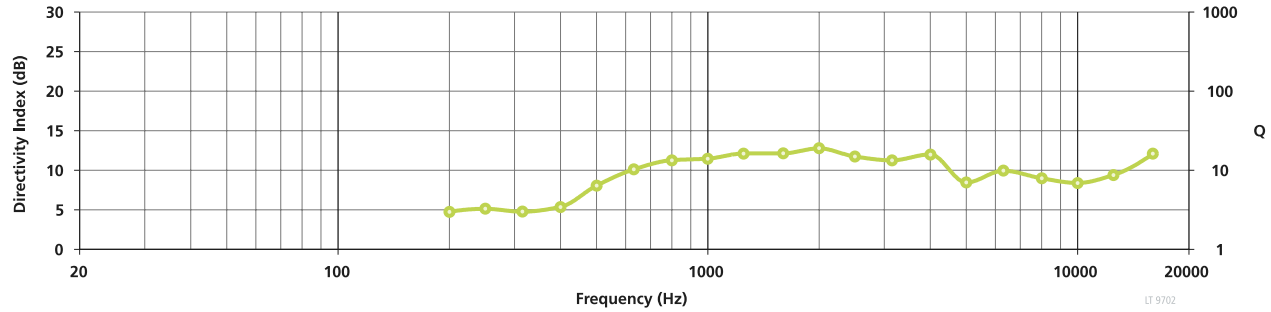

Beamwidth

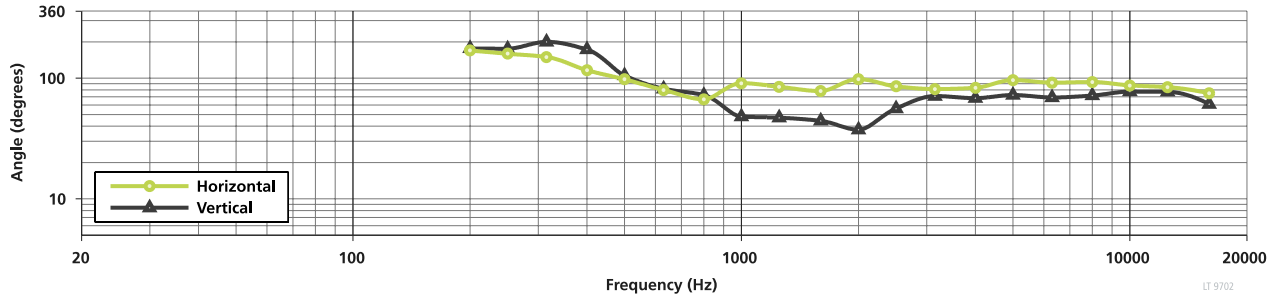

Impedance

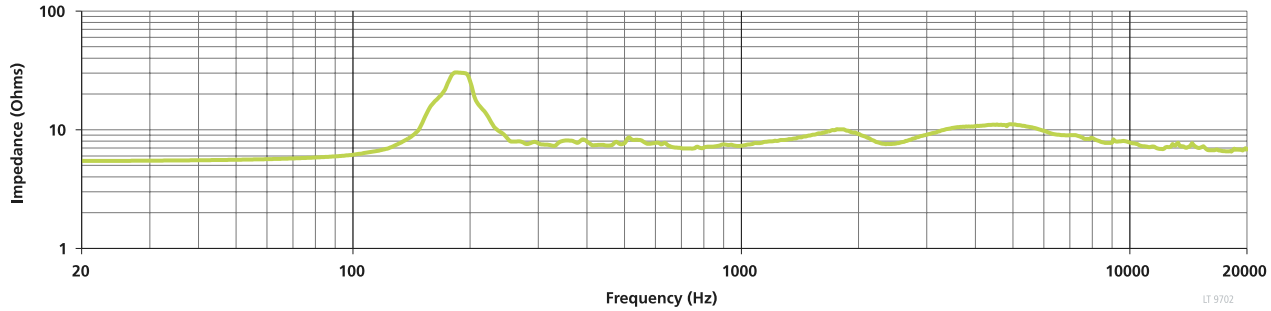

On-Axis Response

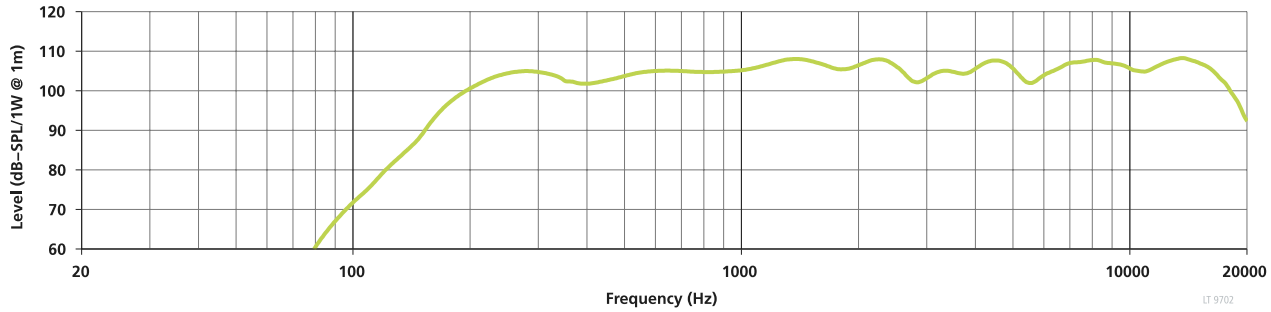

Wiring Diagram

Passive

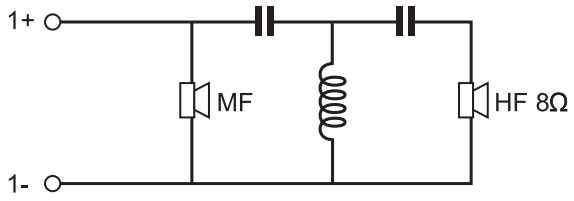

Biamped

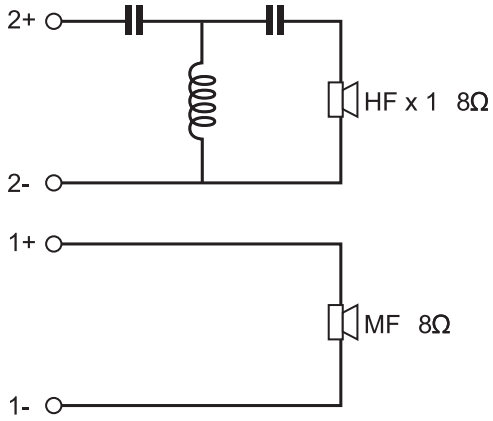

Mechanical Diagrams

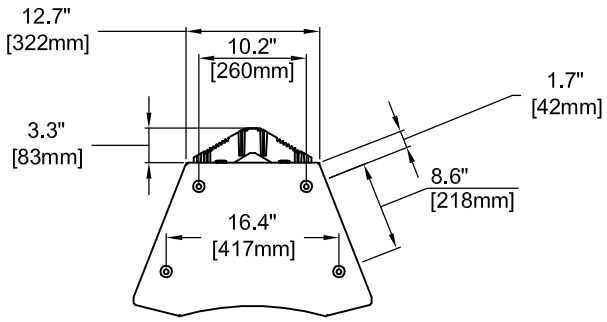

Top View

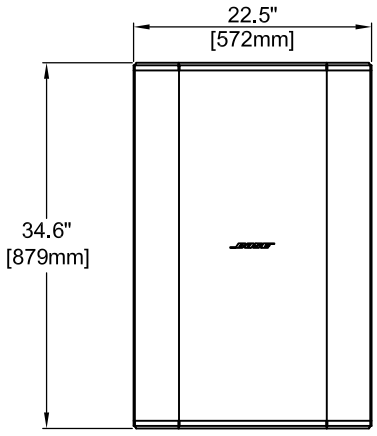

Front View

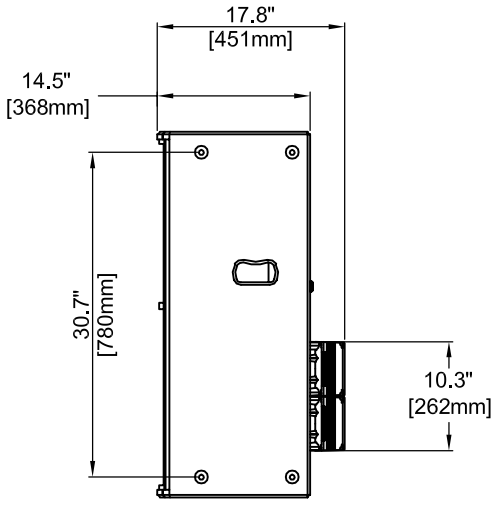

Right View

Horizontal Plots

250 Hz Octave Band

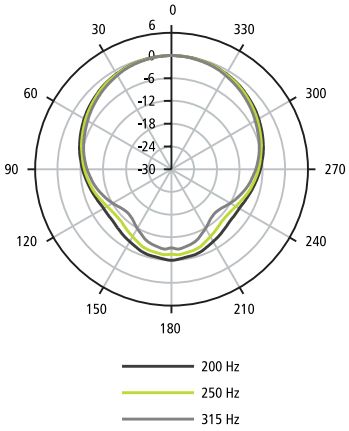

500 Hz Octave Band

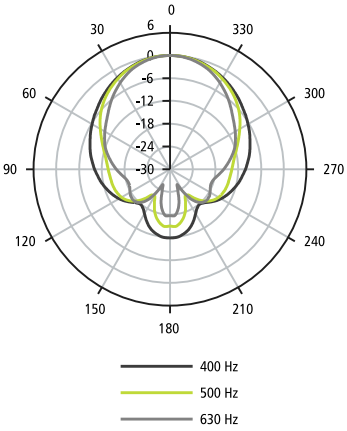

1000 Hz Octave Band

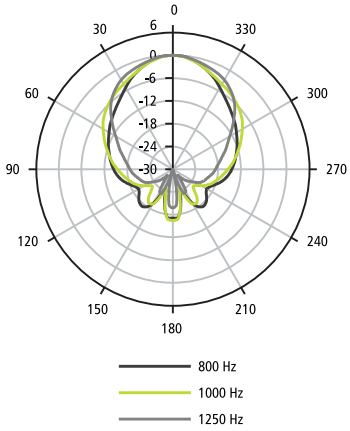

2000 Hz Octave Band

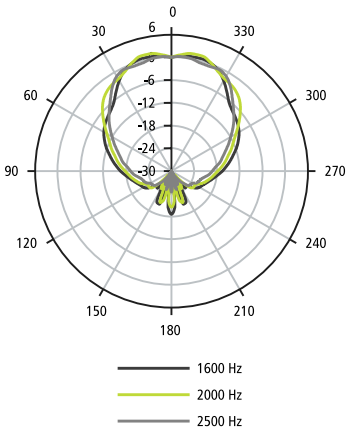

4000 Hz Octave Band

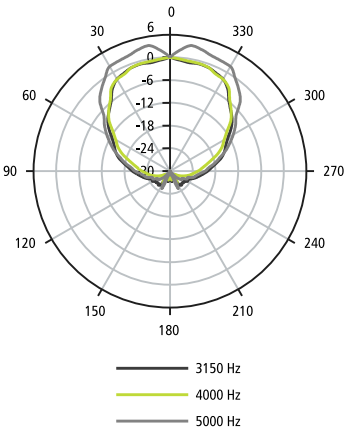

8000 Hz Octave Band

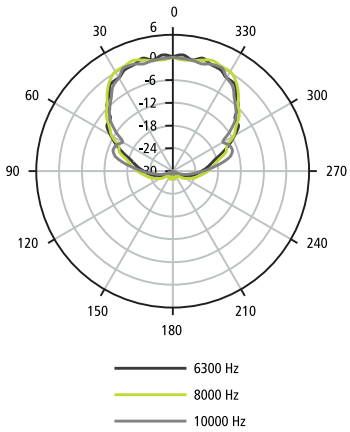

16000 Hz Octave Band

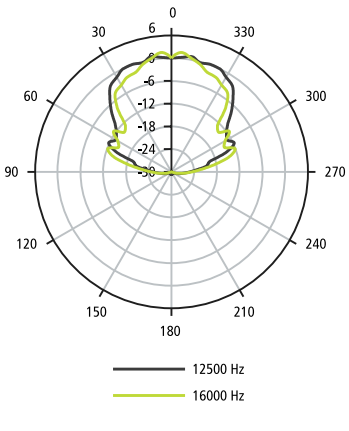

LT 9702

Vertical Plots

250 Hz Octave Band

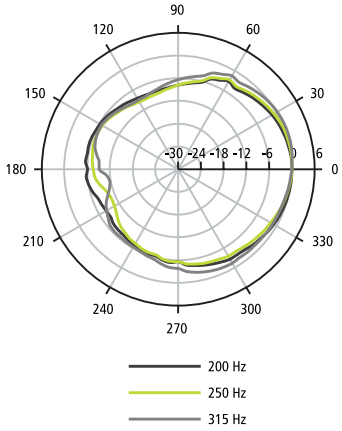

500 Hz Octave Band

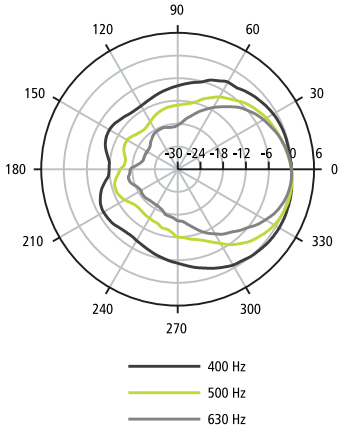

1000 Hz Octave Band

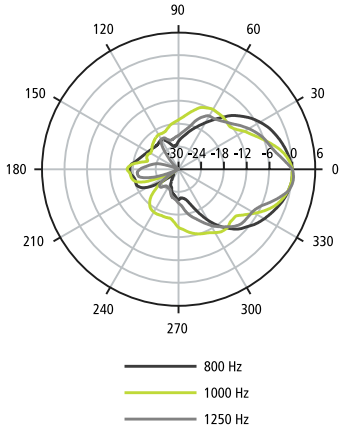

2000 Hz Octave Band

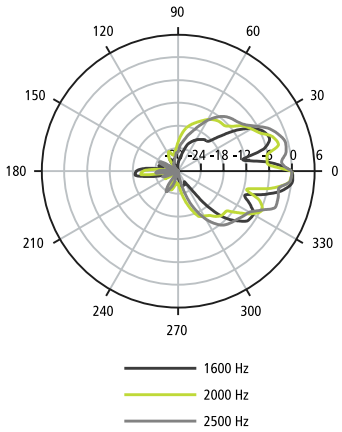

4000 Hz Octave Band

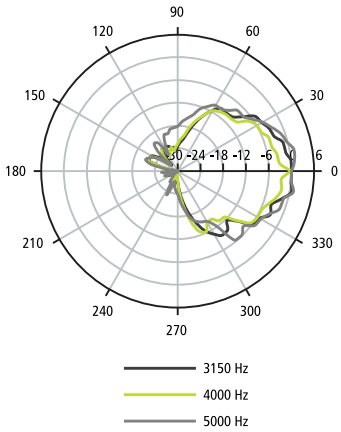

8000 Hz Octave Band

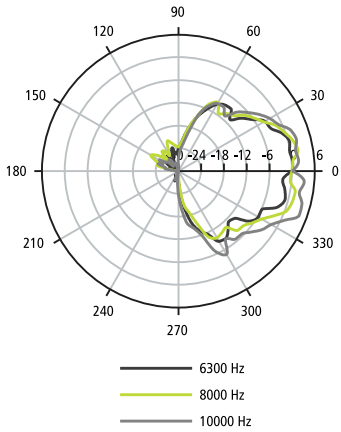

16000 Hz Octave Band

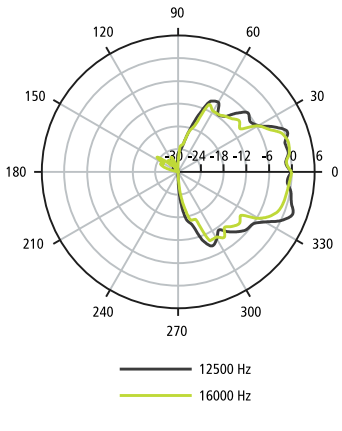

LT 9702

LT 9702® WR
high-output mid/high loudspeaker

TECHNICAL DATA SHEET

Architects' and Engineers' Specifications

The 2-way, mid/high-frequency loudspeaker shall contain a 3" (76 mm) diaphragm compression driver and two (2) midrange manifolds, each summing two (2) 4.5" (114 mm) cone drivers in a heat-sink/acoustic summation assembly. The transducers will exit into a large-format waveguide with 90° x 70° nominal beamwidth and effective pattern control to approximately 250 Hz (horizontal) and 500 Hz (vertical). An internal filter network with crossover of 1.6 kHz shall allow passive or bi-amp operation.

On-axis system frequency response shall be 220 Hz to 16 kHz (+/- 3 dB) with recommended crossover and active equalization. The system sensitivity shall be 105 dB SPL with 1 watt input and be capable of producing peak output of 132 dB SPL on axis at 1 meter. In passive mode, the system shall handle 140 watts of amplifier power (IEC 268-5 pink noise, 6 dB crest factor, for 100 hours) and have a nominal input impedance of 8 ohms. In bi-amp mode, the mid-frequency section shall handle 140 watts of amplifier power and have a nominal input impedance of 8 ohms, while the high-frequency section shall handle 75 watts of amplifier power and have a nominal input impedance of 8 ohms.

The trapezoidal enclosure shall be constructed of void-free, exterior-grade Baltic birch plywood with extensive internal bracing. The enclosure interior shall be treated with wood sealer and the exterior finished with a two-part spray polyurethane coating (Chemthane 7030 or equivalent) to resist weather elements and scuffing. The enclosure shall be covered by a 16-gauge perforated stainless steel grille with powder-coated finish and backed with an open-cell foam. The loudspeaker shall survive water incursion consistent with the IEC 529 IPX5 rating. The enclosure shall have sixteen (16) stainless steel threaded inserts (4 each: top, bottom, sides) that accept standard SAE 3/8"-16 rigging hardware. Inputs shall be two (2) NL4 Neutrik® Speakon® connectors. Loudspeaker dimensions shall be 34.6" x 22.5" x 17.8" (879 mm x 572 mm x 451 mm). Net weight shall be 93 lb (42.3 kg).

The 2-way, mid/high-frequency loudspeaker shall be the Bose® LT 9702® WR loudspeaker.

All information subject to change without notice.
® 2012 Bose Corporation
All trademarks are those of their respective owners.