# 3/2-directional valve, electrically operated, Series AS2-SOV

R412006380

General series information
Series AS2

- The AVENTICS Series AS2 is a modular, versatile maintenance unit for universal application. This Series offers compact dimensions, is highly efficient, lightweight and easy-to-use. The AVENTICS Series AS guarantees reliability, safety, and efficiency with a simplified assembly and maintenance efforts.




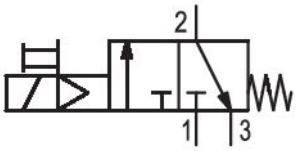


## Technical data

| | |
|---|---|
| Industry | Industrial |
| Activation | Electrically |
| Nominal flow Qn | 2000 l/min |
| Compressed air connection | G 1/4 |
| Working pressure min. | 2.5 bar |
| Working pressure max | 10 bar |
| DC operating voltage | 24 V |
| Sealing principle | soft seal |
| Connection type | Pipe connection |
| Parts | 3/2-directional valve |
| Can be assembled into blocks | Can be assembled into blocks |
| basic valve with electrical connector | Basic valve with pilot valve |
| Type | Poppet valve |

| | |
|---|---|
| Min. ambient temperature | -10 °C |
| Max. ambient temperature | 50 °C |
| Medium | Compressed air<br>Neutral gases |
| Max. particle size | 25 µm |
| Compressed air connection, exhaust | G 1/4 |
| Nominal flow Qn 1 to 2 | 2000 l/min |
| Nominal flow Qn 2 to 3 | 380 l/min |
| Operating voltage | 24 V DC |
| Power consumption DC | 2 W |
| Protection class with connection | IP65 |
| Electrical connection type 2 | Plug |
| Electrical connection 2, thread size | M12x1 |
| Weight | 0.219 kg |

## Material

| | |
|---|---|
| Housing material | Polyamide |
| Seal material | Acrylonitrile butadiene rubber |
| Material threaded bushing | Die cast zinc |
| Material front plate | Acrylonitrile butadiene styrene |
| Part No. | R412006380 |

## Technical information

The pressure dew point must be at least 15 °C less than ambient and medium temperature and may not exceed 3 °C.

Nominal flow Qn with secondary pressure p2 = 6 bar at Δp = 1 bar

A change in the flow direction (from air supply on the left to air supply on the right) occurs by rotating installation by 180° about the vertical axis. Please see the operating instructions for further details.

A short silencer is required for wall mounting (see accessories e.g. R412004817).

## Dimensions in mm

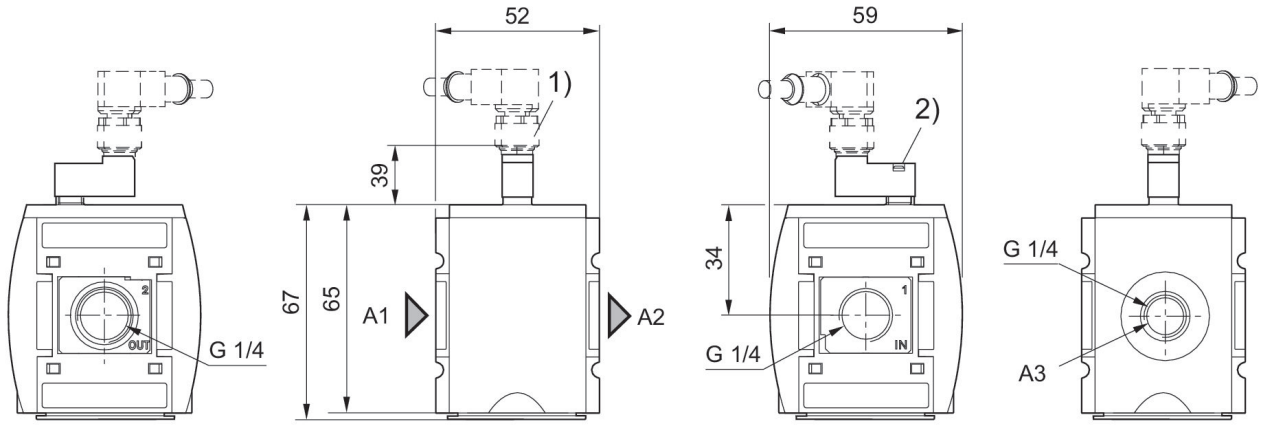


A1 = input
A2 = output
A3 = ventilation port
1) plug M12
2) Manual override

## Flow rate characteristic

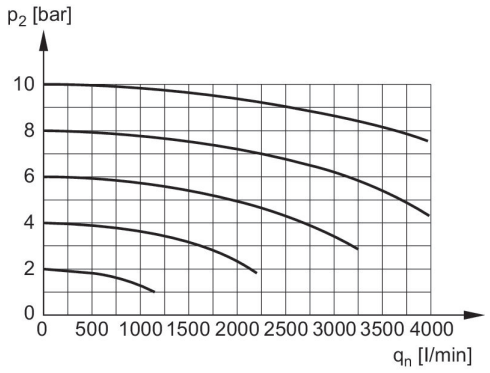


p2 = Secondary pressure
qn = Nominal flow

## Rear exhaust

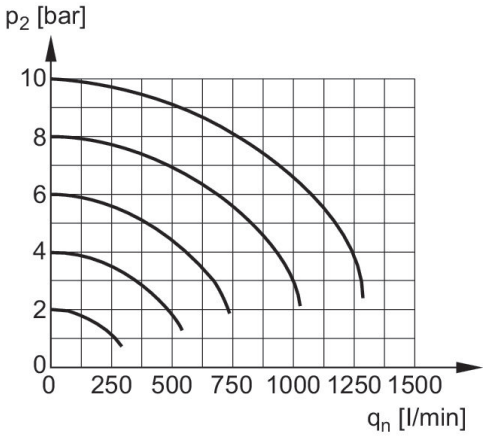


p2 = Secondary pressure
qn = Nominal flow

## Pin assignment M12x1

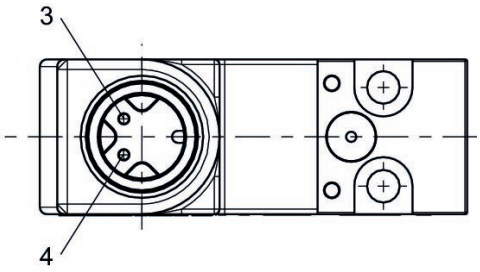


3: +/-
4: +/-

## Accessories overview

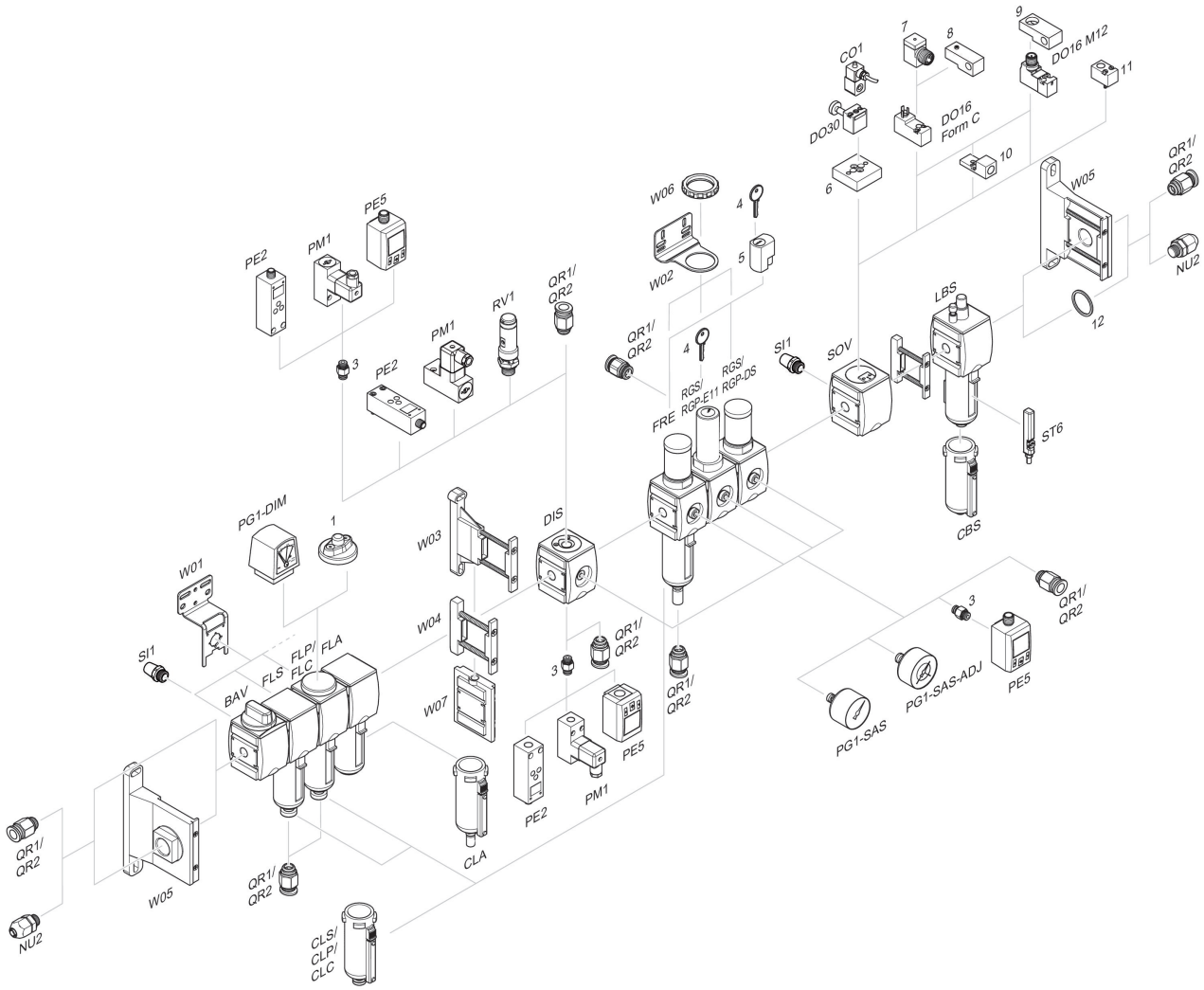


1 = contamination display 3 = Double nipple 4 = Key for E11 locking 5 = mortise lock 6 = Transition plate DO30 7 = Adapter, Series CON-VP 8 = Mounting aid DO16, form C 9 = Mounting aid DO16, M12 10 = Adapter for external pilot air 11 = Adapter pneumatic operation 12 = Sealing ring