Brand of NTN corporation

Technical data

ESFCE204

Bearing units



Grey cast housing, radial insert ball bearing with eccentric locking collar, single lip seal

KIT CONTENT

ES204G2, FCE204

VISUAL (S)

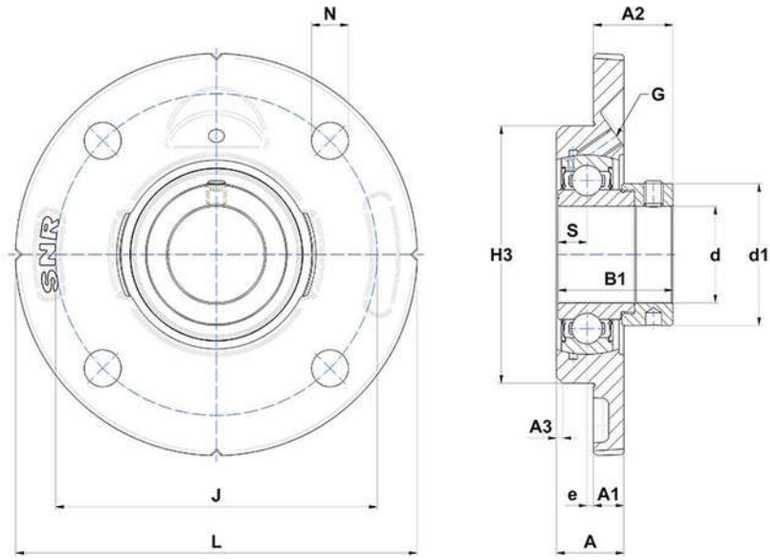

PRODUCT DEFINITION

Brand	SNR
A - Housing height	18 mm
A1 - Housing foot height / flange height	8 mm
A2 - Total height from mounting surface	21,4 mm
A3 - Centering depth / chamfer dimension	2 mm
B - Width of Inner Ring	21,4 mm

ESFCE204
Bearing units

PRODUCT DEFINITION	
B1 - Overall width Inner Ring	30,9 mm
d - Shaft diameter	20 mm
d1 - Outer dia of eccent. Lock. collar / nut of adapter sleeve	32,4 mm
e - Distance mounting surface to bearing center	-2 mm
G - Grease fitting	M6x1
H3 - Centering dia	62 mm
J - Mounting holes distance	78 mm
L - Housing width / diameter	100 mm
N - Mounting hole dimension	9 mm
S - Distance front side/bearing centre	7,5 mm

PRODUCT PERFORMANCE	
C - Dynamic load rating	12800000 mN
C0 - Static load rating	6650000 mN
Operating temperature min.	253,15 °K
Operating temperature max.	373,15 °K

OTHER FEATURES	
Mass	0,52 kg
Recommended tightening torque for set screw	5.5 N-m