simex

**Assisting the automation industry since 1986**

# User manual
# METER
# SRT-N118

- Firmware: v.6.00 or higher
- Input type: Pt100/500/1000
- Wall mounting case IP 67




CE

Read the user's manual carefully before starting to use the unit or software.
Producer reserves the right to implement changes without prior notice.

# CONTENTS


**1. BASIC REQUIREMENTS AND USER SAFETY ..... 3**
**2. GENERAL CHARACTERISTICS ..... 4**
**3. TECHNICAL DATA ..... 5**
**4. DEVICE INSTALLATION ..... 7**
4.1. UNPACKING ..... 7
4.2. ASSEMBLY ..... 7
4.3. CONNECTION METHOD ..... 8
4.4. MAINTENANCE ..... 16
**5. FRONT PANEL DESCRIPTION ..... 17**
**6. PRINCIPLE OF OPERATION ..... 17**
6.1. MEASUREMENT MODE ..... 17
6.2. DETECTION OF THE PEAK VALUES ..... 18
6.3. CONTROL OF THE RELAY OUTPUTS ..... 19
6.3.1. One threshold mode ..... 20
6.3.2. Two thresholds mode ..... 21
**7. DEVICE PROGRAMMING ..... 22**
7.1. PROGRAMMING MENU ..... 22
7.2. PARAMETERS EDITION ..... 23
7.2.1. Numeric parameters (digit change mode) ..... 23
7.2.2. Numeric parameters (slide change mode) ..... 23
7.2.3. Switch parameters (“LIST” type) ..... 24
7.3. MENU DESCRIPTION ..... 24
7.3.1. “rEL1” menu ..... 25
7.3.2. “inPt” menu ..... 27
7.3.3. ”OutP” menu ..... 27
7.3.4. ”bri” parameter ..... 29
7.3.5. ”HOLd” menu ..... 29
7.3.6. ”SECu” menu ..... 30
7.3.7. ”rS” menu ..... 30
7.3.8. ”Edit” parameter ..... 31
7.3.9. ”dEFS” parameter ..... 31
7.3.10. ”SErv” menu ..... 31
7.4. MENU STRUCTURE ..... 32
**8. THE ALARM LED ..... 34**
**9. ANALOGUE OUTPUT VALUE CALCULATION ..... 34**
**10. THE MODBUS PROTOCOL HANDLING ..... 34**
10.1. LIST OF REGISTERS ..... 35
10.2. TRANSMISSION ERRORS DESCRIPTION ..... 38
10.3. EXAMPLES OF QUERY/ANSWER FRAMES ..... 38
**11. DEFAULT AND USER'S SETTINGS LIST ..... 41**

***Explanation of symbols used in the manual:***

*- This symbol denotes especially important guidelines concerning the installation and operation of the device. Not complying with the guidelines denoted by this symbol may cause an accident, damage or equipment destruction.*

***IF THE DEVICE IS NOT USED ACCORDING TO THE MANUAL THE USER IS RESPONSIBLE FOR POSSIBLE DAMAGES.***

*- This symbol denotes especially important characteristics of the unit. Read any information regarding this symbol carefully*

## *1. BASIC REQUIREMENTS AND USER SAFETY*

- **The manufacturer is not responsible for any damages caused by inappropriate installation, not maintaining the proper environmental conditions and using the unit contrary to its assignment.**
- Installation should be conducted by qualified personnel . During installation all available safety requirements should be considered. The fitter is responsible for executing the installation according to this manual, local safety and EMC regulations.
- If the device is equipped with PE connector, it should be connected to PE wire. Otherwise PE wire should be connected to GND connector.
- The unit must be properly set-up, according to the application. Incorrect configuration can cause defective operation, which can lead to unit damage or an accident.
- **If in the case of a unit malfunction there is a risk of a serious threat to the safety of people or property additional, independent systems and solutions to prevent such a threat must be used.**
- **The unit uses dangerous voltage that can cause a lethal accident. The unit must be switched off and disconnected from the power supply prior to starting installation of troubleshooting (in the case of malfunction).**
- Neighbouring and connected equipment must meet the appropriate standards and regulations concerning safety and be equipped with adequate overvoltage and interference filters.
- **Do not attempt to disassemble, repair or modify the unit yourself. The unit has no user serviceable parts. Defective units must be disconnected and submitted for repairs at an authorized service centre.**

- Do not use the unit in areas threatened with excessive shocks, vibrations, dust, humidity, corrosive gasses and oils.
- Do not use the unit in areas where there is risk of explosions.
- Do not use the unit in areas with significant temperature variations, exposure to condensation or ice.
- Do not use the unit in areas exposed to direct sunlight.
- Make sure that the ambient temperature (e.g. inside the control box) does not exceed the recommended values. In such cases forced cooling of the unit must be considered (e.g. by using a ventilator).

**The unit is designed for operation in an industrial environment and must not be used in a household environment or similar.**

## *2. GENERAL CHARACTERISTICS*

The **SRT-N118** meter is equipped with Pt 100/Pt 500/Pt 1000 type input, with automatic connection recognition ( three or four wire sensor). The measurement range spans from -100 °C to +600 °C, and input is fully linearised accordingly to PN-EN60751+A2:1999 standard. Result is showed on 4-digit LED display.

The device can be equipped with two relay (or OC type) outputs. Optionally **SRT-N118** with one relay (or OC type) output can be equipped with active current output, passive isolated current output or active voltage output. Device **SRT-N118** is equipped with RS-485 / Modbus RTU communication interface and 24V/100mA supply output for free use. The meter can be ordered in two power supply versions.

The device has 4 buttons being used for main presets programming. To get high protection level, the keyboard is mounted under transparent cover. To allow user to change presets without opening the cover, an IR sensor is mounted. Remote controller keyboard is equivalent to the device keyboard (Note, that remote controller is not a part of the **SRT-N118** set – it is an additional equipment).

**SRT-N118** can be used for controlling and regulation of processes need proportional and threshold control like: temperature processes (heating or cooling), valves controlling or other.

## 3. TECHNICAL DATA

| | |
|---|---|
| Power supply voltage<br>(depending on version) | 85...**230**...260V AC/DC; 50 ÷ 60 Hz (separated)<br>or 19...**24**...50V DC and 16...**24**...35V AC (separated) |
| External fuse (required) | T - type, max. 2 A |
| Power consumption | max. 5 VA @ 85 ÷ 260V AC/DC<br>max. 5 VA @ 16V ÷ 35V AC<br>max. 5 W @ 19V ÷ 50V DC |
| **Measurement input** | Pt 100/ Pt 500/Pt 1000 type with automatic connection recognition ( 3 or 4-wires) |
| Measurement range | -100°C ÷ +600°C |
| Measurement accuracy | ± 0,1% @ 25°C; ± one digit |
| Measurement wires resistance | max. 20 Ω (every wire) |
| **Sensor power supply output** | 24V +5%, -10% / max. 100 mA, stabilized |
| **Relay output** | 0, 1 or 2 NO, 1A/250V AC (cos φ = 1) |
| **OC-type output** | 0, 1 or 2; 30mA / 30VDC / 100mW |
| **Active current output**<br>(optional, for one relay or one OC-type output version only) | range max. 0 ÷ 24 mA |
| Load resistance max. | 700 Ω |
| **Passive isolated current output**<br>(optional, for one relay or one OC-type output version only) | range max. 2.8 ÷ 24 mA |
| Supply voltage | Us = 9.5 ÷ 36V |
| Load resistance max. | (Us – 9.5V) / 24mA [kΩ] |
| **Active voltage output**<br>(optional, for one relay or one OC-type output version only) | range max. 0 ÷ 11V |
| Load resistance min. | 2000 Ω |
| Temperature stability | 50 ppm / °C |

| | |
|---|---|
| Communication interface | RS 485, 8N1 and 8N2, Modbus RTU, not separated |
| Baud rate | 1200 bit/s ÷ 115200 bit/s |
| Display<br>(depending on version) | LED, 4 digit, 20mm height, red or<br>LED, 4 digit, 38mm height, green |
| Data memory | non-volatile memory, EEPROM type |
| Protection level | IP 67 |
| Housing type | wall mounted |
| Housing material | ABS + fibreglass |
| Housing dimensions | |
| without glands: | 110 x 80 x 67 mm |
| with glands: | 110 x 105 x 67 mm |
| Operating temperature | 0°C do +50°C<br>or -20°C to +50°C |
| Storage temperature | -10°C do +70°C<br>or -20°C to +70°C |
| Humidity | 5 to 90% no condensation |
| Altitude | up to 2000 meters above sea level |
| Screws tightening max. torque | 0,5 Nm |
| Max. connection leads cross section | 3 $mm^2$ (for connectors 1÷6) or<br>2 $mm^2$ (for connectors 7÷16) |
| Safety requirements | according to: PN-EN 61010-1<br>installation category: II<br>pollution degree: 2<br>voltage in relation to ground: 300V AC<br>insulation resistance: >20MΩ<br>insulation strength between power supply and input/output terminal: 1min. @ 2300V<br>insulation strength between relays terminal: 1min. @ 1350V |
| EMC | according to: PN-EN 61326-1 |



**This is a class A unit. In a residential or a similar area it can cause radio frequency interference. In such cases the user can be requested to use appropriate preventive measures.**

# 4. DEVICE INSTALLATION

The unit has been designed and manufactured in a way assuring a high level of user safety and resistance to interference occurring in a typical industrial environment. In order to take full advantage of these characteristics installation of the unit must be conducted correctly and according to the local regulations.

- Read the basic safety requirements on page **3** prior to starting the installation.
- Ensure that the power supply network voltage corresponds to the nominal voltage stated on the unit's identification label.
- The load must correspond to the requirements listed in the technical data.
- All installation works must be conducted with a disconnected power supply.
- Protecting the power supply connections against unauthorized persons must be taken into consideration.

## 4.1. UNPACKING

After removing the unit from the protective packaging, check for transportation damage. Any transportation damage must be immediately reported to the carrier. Also, write down the unit serial number located on the housing and report the damage to the manufacturer.

Attached with the unit please find:
- user's manual,
- warranty,

## 4.2. ASSEMBLY

- Disconnect the power supply prior to starting assembly.
- Check the connections are wired correctly prior to switching the unit on.

To install device on the wall, a pinholes should be made. Figure 4.1 presents dimensions of the device and distances between holes. The back side of the device has four mounting holes. This part of the case should be mounted to a wall by screws.

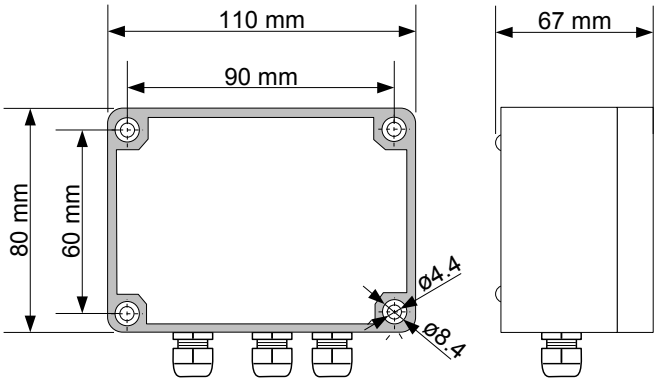


*Figure 4.1. Device and assembly dimensions*

## *4.3. CONNECTION METHOD*

***Caution***

- Installation should be conducted by qualified personnel . During installation all available safety requirements should be considered. The fitter is responsible for executing the installation according to this manual, local safety and EMC regulations.

- The unit is not equipped with an internal fuse or power supply circuit breaker. Because of this an external time-delay cut-out fuse with a small nominal current value must be used (recommended bipolar, max. 2A) and a power supply circuit-breaker located near the unit. In the case of using a monopolar fuse it must be mounted on the phase cable (L).

- The power supply network cable diameter must be selected in such a way that in the case of a short circuit of the cable from the side of the unit the cable shall be protected against destruction with an electrical installation fuse.

- Wiring must meet appropriate standards and local regulations and laws.

- In order to secure against accidental short circuit the connection cables must be terminated with appropriate insulated cable tips.

- Tighten the clamping screws. The recommended tightening torque is 0.5 Nm. Loose screws can cause fire or defective operation. Over tightening can lead to damaging the connections inside the units and breaking the thread.

- In the case of the unit being fitted with separable clamps they should be inserted into appropriate connectors in the unit, even if they are not used for any connections.

**- Unused terminals (marked as n.c.) must not be used for connecting any connecting cables (e.g. as bridges), because this can cause damage to the equipment or electric shock.**

- If the unit is equipped with housing, covers and sealing to, protecting against water intrusion, pay special attention to their correct tightening or clamping. In the case of any doubt consider using additional preventive measures (covers, roofing, seals, etc.). Carelessly executed assembly can increase the risk of electric shock.

- After the installation is completed do not touch the unit's connections when it is switched on, because it carries the risk of electrical shock.

**Due to possible significant interference in industrial installations appropriate measures assuring correct operation of the unit must be applied. To avoid the unit of improper indications keep recommendations listed below.**

– Avoid running signal cables and transmission cables together with power supply cables and cables controlling inductive loads (e.g. contactors). Such cables should cross at a right angle.

– Contactor coils and inductive loads should be equipped with interference protection systems, e.g. RC-type.

– Use of screened signal cables is recommended. Signal cable screens should be connected to the earthing only at one of the ends of the screened cable.

– In the case of magnetically induced interference the use of twisted pair of signal cables is recommended. Twisted pair (best if shielded) must be used with RS-485 serial transmission connections.

– In the case of measurement or control signals are longer than 30m or go outside of the building then additional safety circuits are required.

– In the case of interference from the power supply side the use of appropriate interference filters is recommended. Bear in mind that the connection between the filter and the unit should be as short as possible and the metal housing of the filter must be connected to the earth with the largest possible surface. The cables connected to the filter output must not be run with cables with interference (e.g. circuits controlling relays or contactors).

Connection of the power supply, and the measurement and controlling signals should be made by clamping connectors mounted inside the housing.

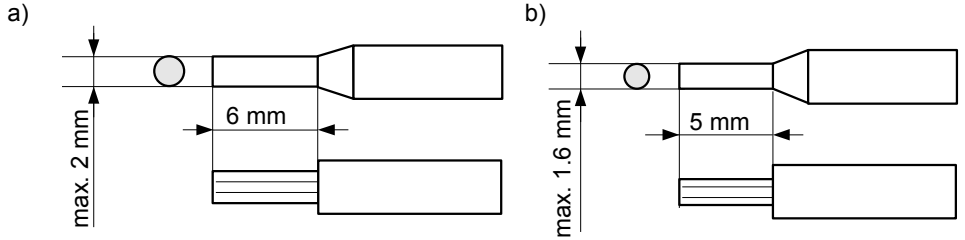


*Figure 4.2. Recommended dimensions of cable stripping*
***a)** for big connectors (1 to 6), **b)** for small connectors (7 to 16)*

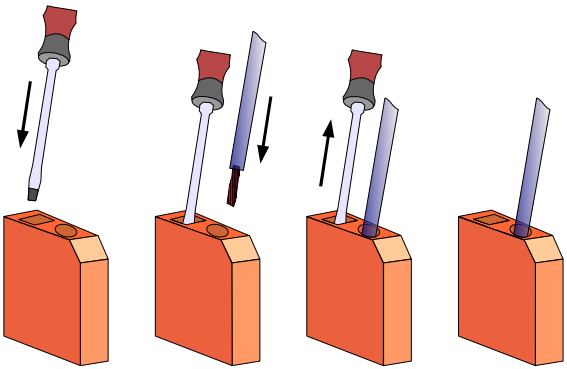

*Figure 4.3. Method of connecting cables to the* clamping *connectors*

**All connections must be made while power supply is disconnected !**

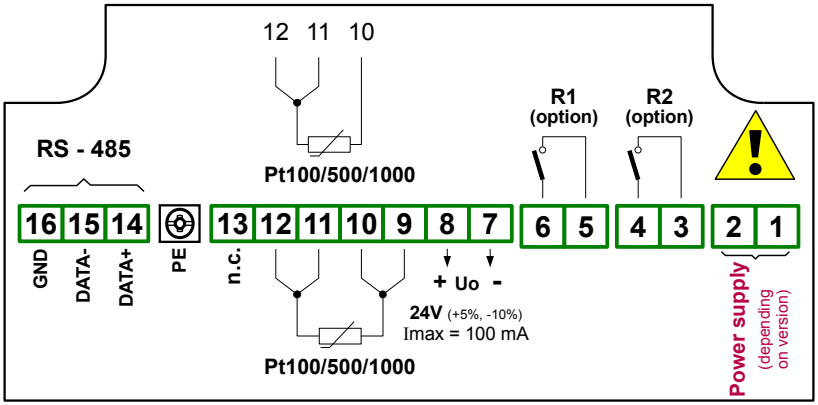


*Figure 4.4. Terminals description (relay outputs)*

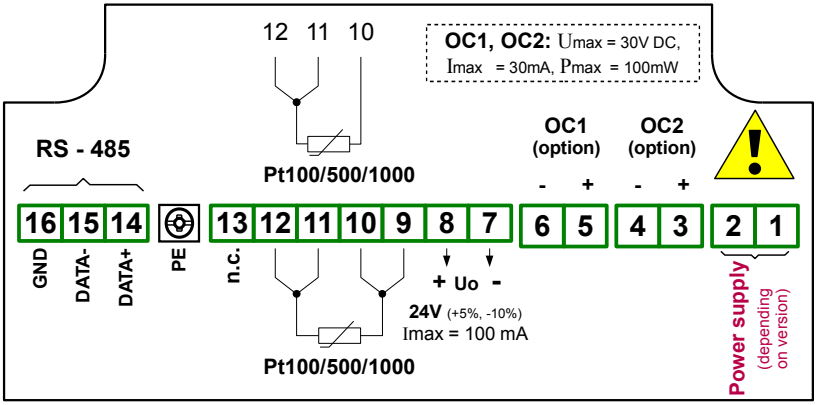


*Figure 4.5. Terminals description (OC-type outputs)*

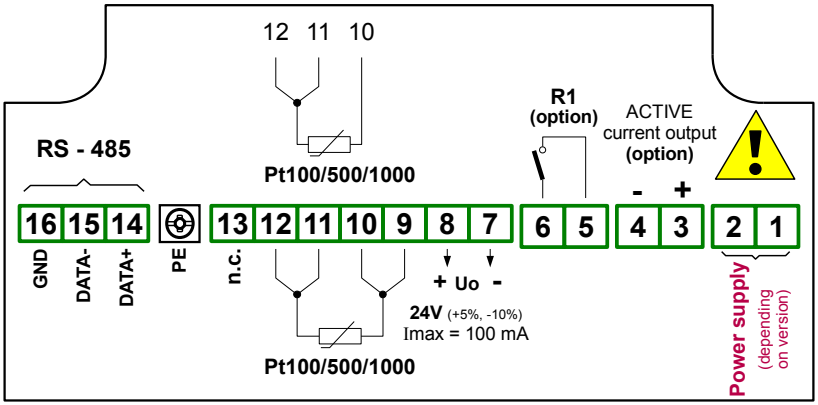


*Figure 4.6. Terminals description (relay and active current outputs)*

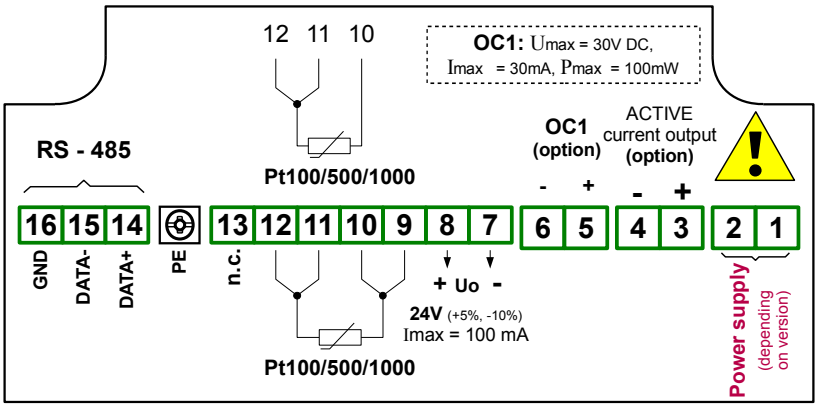


*Figure 4.7. Terminals description (OC-type and active current outputs)*

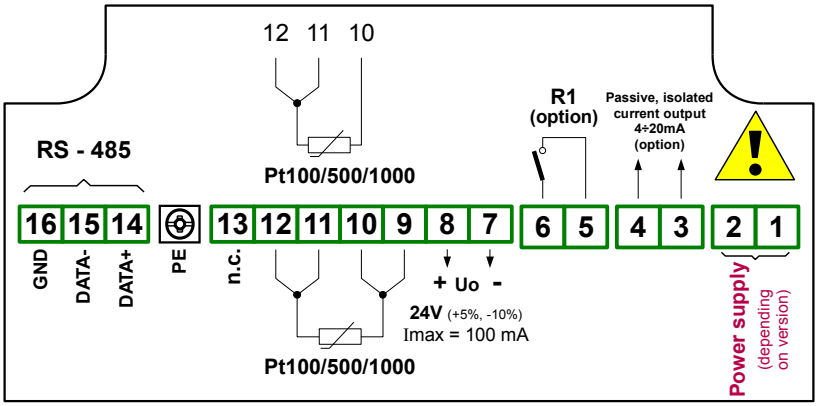


*Figure 4.8. Terminals description (relay and passive current outputs)*

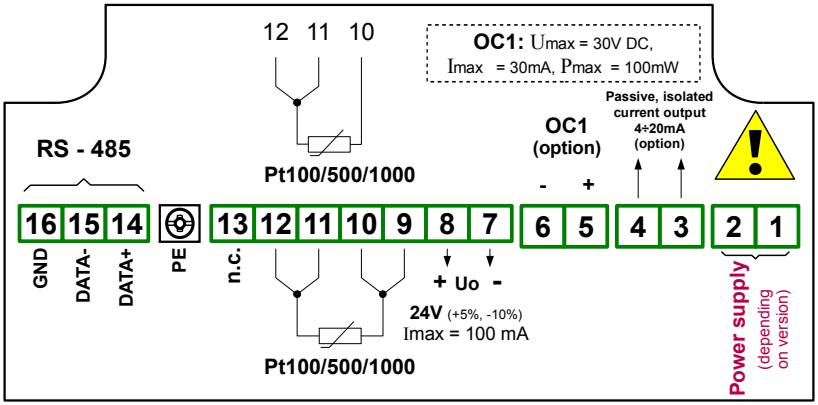


*Figure 4.9. Terminals description (OC-type and passive current outputs)*

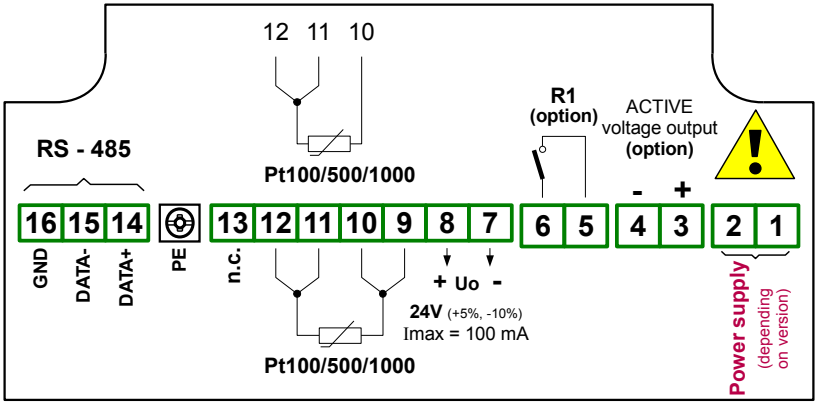


*Figure 4.10. Terminals description (relay and active voltage outputs)*

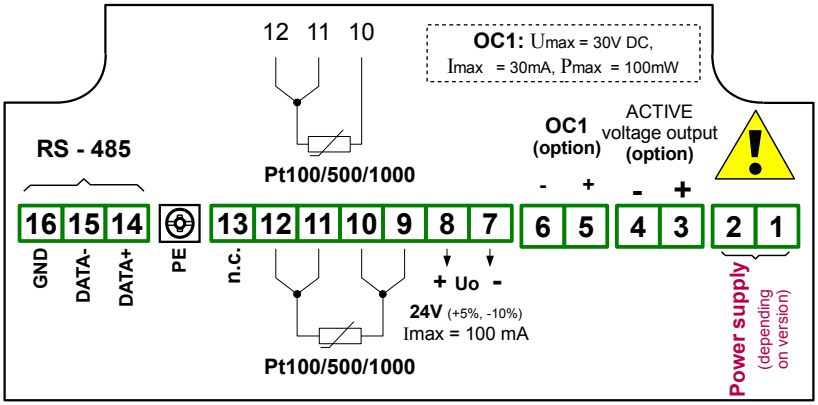


*Figure 4.11. Terminals description (OC-type and active voltage outputs)*

Temperature sensor can be connected to the device in typical 4-wire circuit (Figure 4.12a) or 3-wire circuit (Figure 4.12b). Due to precision of measurement 4-wire circuit is recommended.

If 2 wire circuit is used it is recommended to connect sensor accordingly to Figure 4.12c. (4-wires circuit with shorted pins 12+11 and 10+9). In this case, the resistance of wires should be as small as possible, to avoid of measurement errors. Measured value can be corrected (constant correction) using „**toFS**" parameter from menu „**inPt**". Due to low precision 2-wire connection is not recommended.

When 4-wires or 2-wires connection is used, the resistance of particular wires (Ra ÷ Rd) **CAN BE DIFFERENT**. When 3-wires connection is used, the resistance of particular wires (Ra ÷ Rd) **MUST BE IDENTICAL** to enable proper compensation of it's resistance. The resistance of particular wire **should not be greater than 20 Ω.**

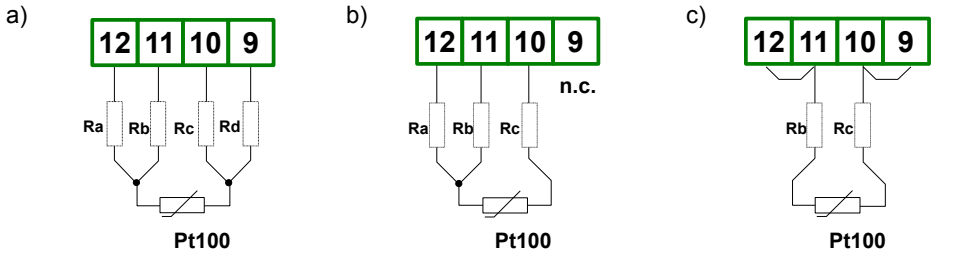


*Figure. 4.12. Connection of sensors:*
*a) 4-wires circuit; b) 3-wires circuit; c) 2-wires circuit*

The connection circuit should not be changed while unit is powered. Every change of connection while the unit is powered causes measurement errors by several seconds after change.

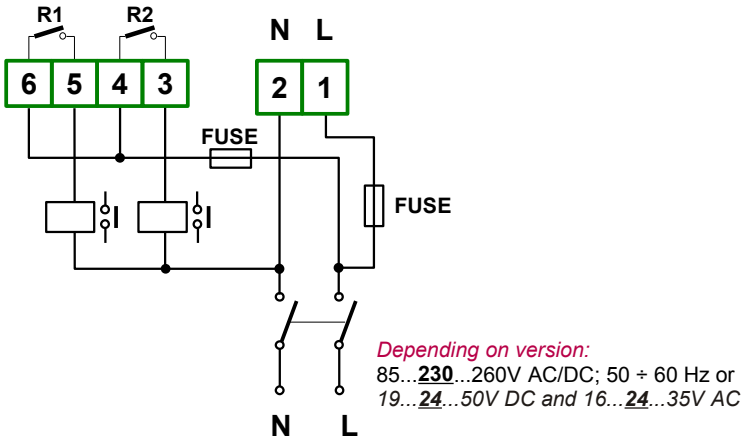


*Figure 4.13. Connection of power supply and relays*

**Contacts of relay outputs are not equipped with spark suppressors. While use the relay outputs for switching of inductive loads (coils, contactors, power relays, electromagnets, motors etc.) it is required to use additional suppression circuit (typically capacitor 47nF/ min. 250VAC in series with 100R/5W resistor), connected in parallel to relay terminals or (better) directly on the load. In consequence of using the suppression circuit, the level of generated electromagnetic disturbances is lower, and the life of relay contacts rises.**

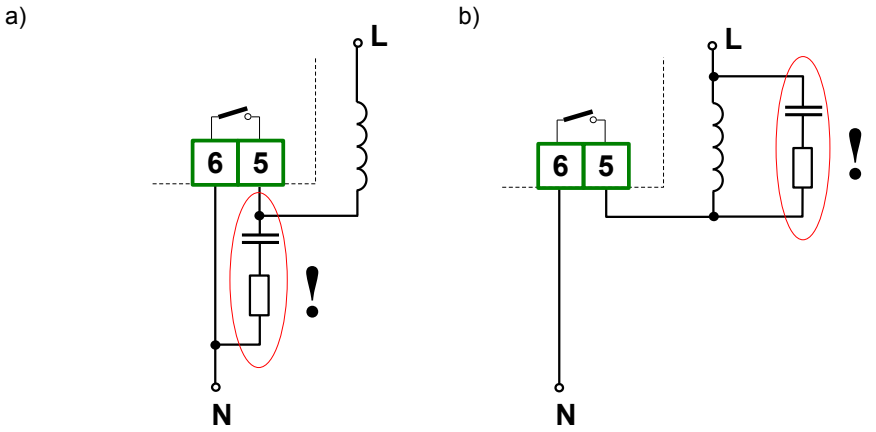


*Figure 4.14. Examples of suppression circuit connection:*
*a) to relay terminals; b) to the inductive load*

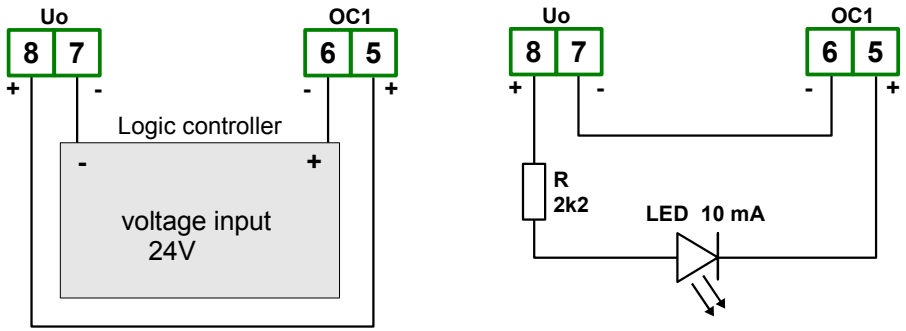


*Figure 4.15. Example of OC-type outputs connection*

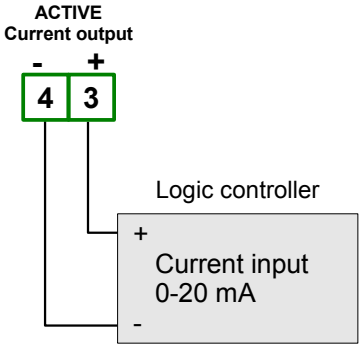


*Figure 4.16. Example of active current outputs connection*
*(for device with active current output only)*

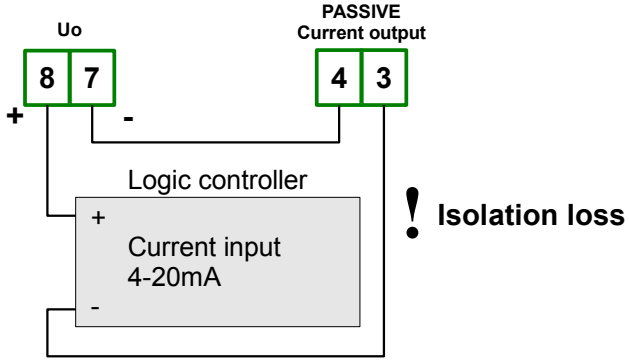


*Figure 4.17. Example of passive current outputs connection (for device with passive current output only)*

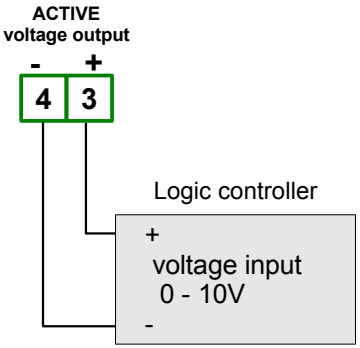


*Figure 4.18. Example of active voltage outputs connection (for device with active voltage output only)*

## 4.4. MAINTENANCE

The unit does not have any internal replaceable or adjustable components available to the user. Pay attention to the ambient temperature in the room where the unit is operating. Excessively high temperatures cause faster ageing of the internal components and shorten the fault-free time of the unit's operation.
In cases where the unit gets dirty do not clean with solvents. For cleaning use warm water with small amount of detergent or in the case of more significant contamination ethyl or isopropyl alcohol.

Using any other agents can cause permanent damage to the housing.

Product marked with this symbol should not be placed in municipal waste. Please check local regulations for disposal of electronic products.

# 5. FRONT PANEL DESCRIPTION

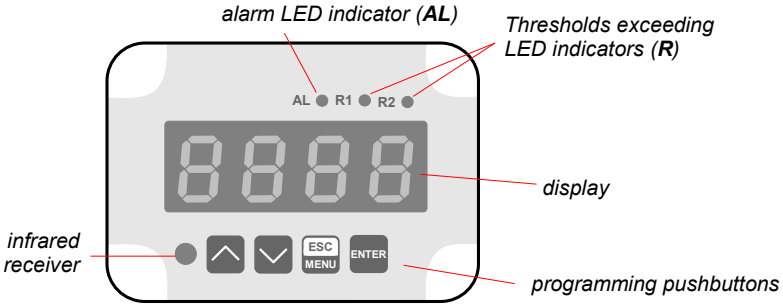


***Symbols and functions of push-buttons:***

ESC MENU

Symbol used in the manual: **[ESC/MENU]**
Functions:
- Enter to main menu ( press and hold by at least 2 sec.)
- Exit the current level and Enter to previous menu (or measure mode)
- Cancel the changes made in parameter being edited

ENTER

Symbol used in the manual: **[ENTER]**
Functions:
- Start to edit the parameter
- Enter to the sub-menu,
- Confirmation of changes made in parameter being edited

Symbol used in the manual: **[^] [v]**
Functions:
- Change of the present menu,
- Modification of the parameter value,
- Change of the display mode.

# 6. PRINCIPLE OF OPERATION

After turning the power supply on, device ID and software version are showed on the display, next the controller goes to the measurement mode.

## 6.1. MEASUREMENT MODE

In the measure mode, the measurement results, are displayed on the display. If the result of measurement exceeds the ***permissible measurement range***, warning **"-Hi-"** or **"-Lo-"** is displayed rather than calculated result, depends on exceeded value. The warning can be effect of measurement circuit malfunction. In that case **"-Lo-"** means shortcut and **"-Hi-"** means break of measurement circuit.

In the measurement mode user can check main thresholds values. After pressing **[^]** or **[v]** button, name of the threshold (e.g. **"rEL1"**) and his value will be displayed on the display in alternating mode. If **[^]** or **[v]** will be pressed in 5 sec again, the next threshold will be displayed, else the device comes back to the measurement mode. If a ***free access*** is enabled (see description of ***"SECu" menu***), user can change the value of particular threshold pressing button **[ENTER]** (see: ***PARAMETERS EDITION***).

All accessible parameters can be changed by entering the menu (see: ***DEVICE PROGRAMMING***). Use the local keyboard or the remote controller to do it. (Note: all parameters can be remote changed via RS-485 interface).

Configuration of the device (via menu or RS-485 interface) **does not stop measures**.

## *6.2. DETECTION OF THE PEAK VALUES*

The **SRT-N118** controller is equipped with peaks detection function. It can detect a peaks of the input signal and display their values. Presets connected with this function are placed in **"HOLd"** menu (see description of ***"HOLd" menu***). The detection of the peak can be done if the measured signal raises and drops of value at least equal to parameter **"PEA"**. Detected peaks are displayed during the time defined by parameter **"timE"**. If a new peak will be detected while one is displayed, this new peak will be displayed and display time counter will be cleared (Figure 6.1). If no peaks are detected while time **"timE"** elapses**,** device starts to show the current value of input signal again. If „**HdiS**"="**HOLD**" then setting parameter **"timE"=0.0** causes holding peak value until **[ESC]** button is pressed. If „**HdiS**"="**rEAL**" then value **"timE"=0.0** means no holding. Displaying peak value is signalized by flashing most right decimal point.

The relays/LEDs and analogue outputs can be controlled depend on the current value of input signal or the peak value (see ***"HOLd" menu***).

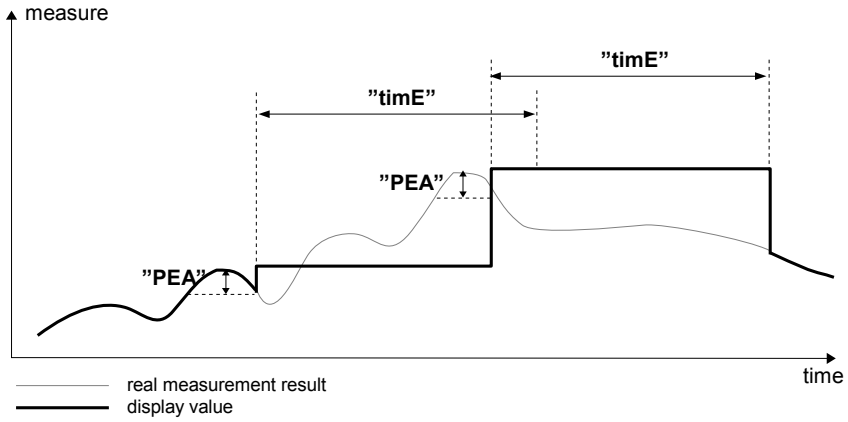


*Figure 6.1. Process of peaks detection*

## 6.3. CONTROL OF THE RELAY OUTPUTS

The control of the object (measured signal) is realized via relay outputs. Front panel LEDs named „**R**" indicates the state of particular relay output.

If device is not equipped with one or more relay outputs, menus refer to this relays are available, but apply to LED indicators only. In such case LEDs indicates exceeding of particular thresholds.

Modes of the control can be changed depend on the values of parameters **"SEtP"**, **"SEt2", "HYSt"**, **"modE"**, **"t on"**, **"toFF"**, **"unit"** and **"AL".** Depend on **"modE"** parameter, relays can be not used or controlled over one or two thresholds values.

If one threshold is used (Figure 6.2) the relay can be turned on (**"modE"** = **"on"**) or off (**"modE"** = **"oFF"**) when the input signal value is contained in ***zone A.*** If two thresholds are used (Figure 6.3) the relay will be turned on when value of input signal is contained in ***zone A*** (**"modE"** = **"in"**) or ***zone B*** (**"modE"** = **"out"**) and turned off if the signal is contained in the second one.

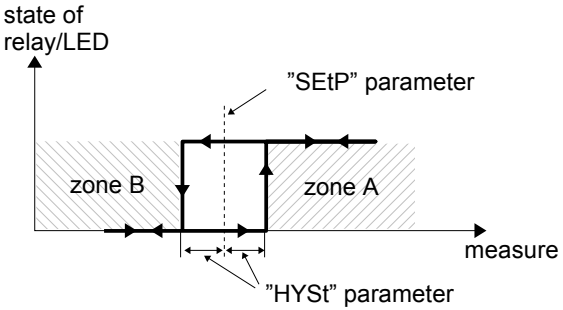


*Figure 6.2. One threshold control of the relay/LED outputs*

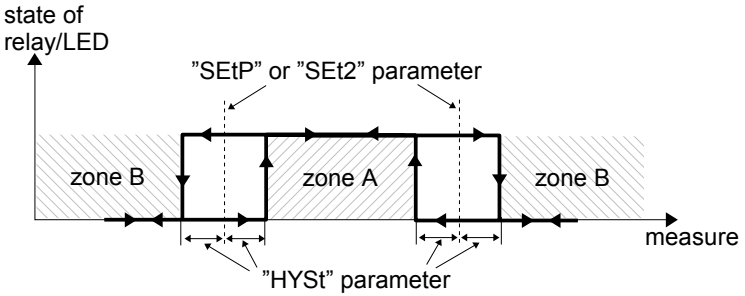


*Figure 6.3. Two threshold control of the relay/LED outputs*

The relay outputs and LEDs (named **R**) can be controlled depend on both - the current value and the peak value (when peak detection is active) of the input signal.

### 6.3.1. One threshold mode

Figure 6.4 presents the principle of relay outputs operation for one threshold mode, and an example values of other parameters.

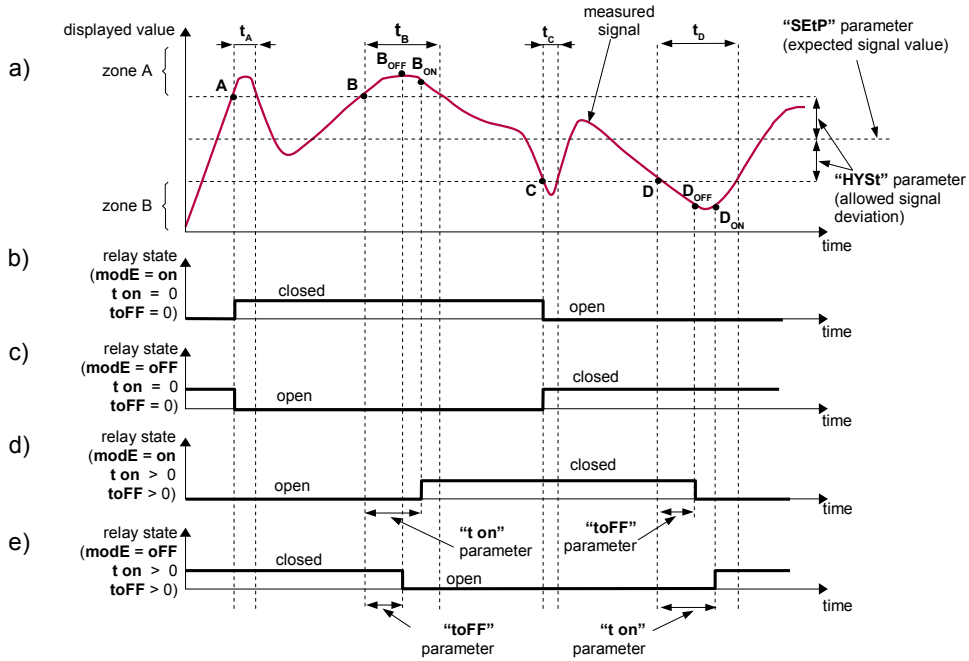


Description:

**A, B, C, D** - points where measured signal exceeds border values (expected value ± allowed deviation)

$B_{ON}$ ,$B_{OFF}$ ,$D_{ON}$ ,$D_{OFF}$ - relays state changes moments: (for **"t on"** > 0, **"toFF"** > 0)

$t_A$ , $t_B$ , $t_C$ , $t_D$ - time periods while input signal is in zone A or zone B

*Figure 6.4. Principle of LED/relay output operation for one threshold mode*

Parameter **"SEtP"** sets a **threshold** of the relay, and parameter **"HYSt"** sets a **hysteresis** of the relay (Figure 6.4 a). The relay can change his state **only** when input value exceeds (over or under) ***border value*** and $t_A$ ,$t_B$ ,$t_C$ ,$t_D$ times (Figure 6.4) are bigger than the time defined by parameters **"t on"**, **"toFF"** and **"unit"**. ***Border values*** means values equal ***threshold+hysteresis*** and ***threshold-hysteresis*** respectively.

If **"t on"** and **"toFF"** parameters are set to "0", then the relay state will be changed **as soon** as input value exceeds any of the ***border values*** (see points A and C, Figure 6.4 a, b, c).

If values of **"t on"** or/and **"toFF"** are positive, then relay state will be turned on if the input value exceeds the ***border values*** and stay bigger (or lower) during at least **"t on"** (see points $B_{ON}$, $D_{ON}$, Figure 6.4 a, d, e). Similarly, the relay will be turned off if time **"toFF"** elapse since the input signal value exceeds any of the ***border values*** (see points $B_{OFF}$, $D_{OFF}$, Figure 6.4 a, d, e).

If tA ,tB ,tC or tD (when input signal stay in ***zone A*** or ***zone B***) are lower than parameters "t on" or "toFF", the relay will not change his state (see points A and C, Figure 6.4 a, d, e).

The state of relay output while the input value exceeds the ***border values*** (points A, B, C, D) is described by parameter **"modE".** The relay can be turned on (**"modE" = "on"**), or turned off (**"modE" = "oFF"**) when input signal value is contained in ***zone A*** (Figure 6.4 a).

The parameter **"AL"** allow user to set the relay output behaviour in critical situations (e. g. Input values exceeds ***permissible measurement range***)**.** User can select that the relays will be turned on, turned off,or not changed in critical situations.

All parameters connected with relay outputs are described in paragraph ***"rEL1" menu***.

### *6.3.2. Two thresholds mode*

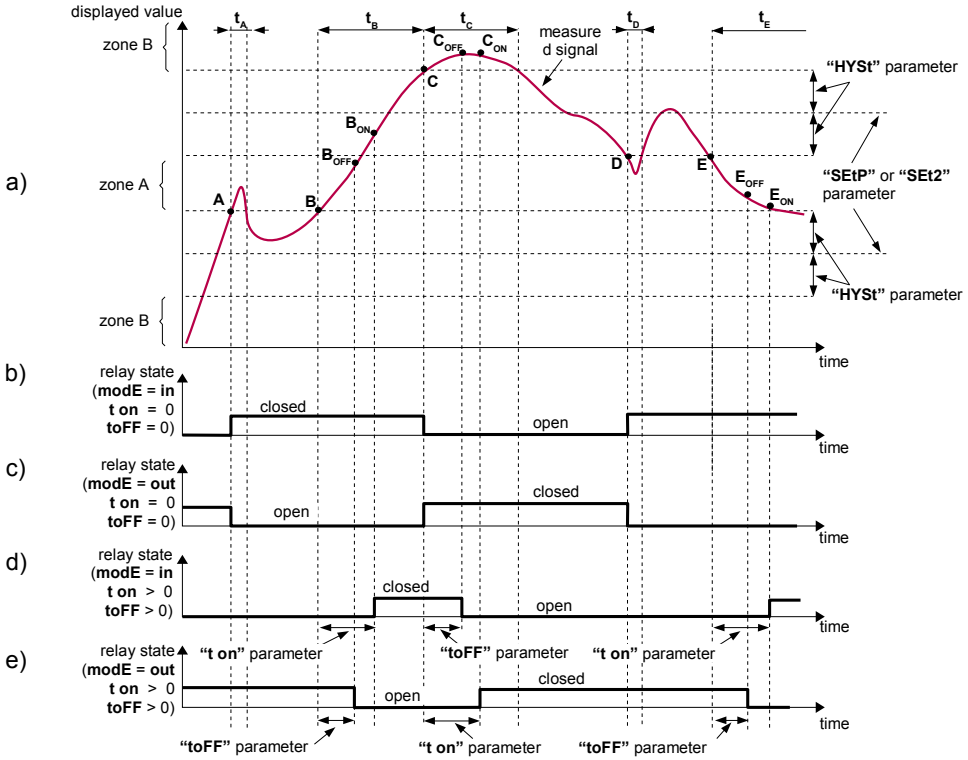


Objaśnienie:

**A, B, C, D, E** - points where measured signal exceeds border values (expected value ± allowed deviation)

$B_{ON}$ ,$B_{OFF}$ ,$C_{ON}$ ,$C_{OFF}$ ,$E_{ON}$ ,$E_{OFF}$ - relays state changes moments: (for **"t on"** > 0, **"toFF"** > 0)

$t_A$ , $t_B$ , $t_C$ , $t_D$ , $t_E$ - time periods while input signal is in zone A or zone B

*Figure 6.5. Principle of LED/relay output operation for two thresholds mode*

Figure 6.5 presents the principle of relay outputs operation for two thresholds mode, and an example values of other parameters. In this mode parameter **"SEt2"** is accessible in common with **"SEtP"**, this parameter describes a second threshold of the relay output. The parameters **"HYSt"**, **"modE"**, **"t on"**, **"toFF"**, **"unit"** and **"AL"** are connected with both **"SEtP"** and **"SEt2"** thresholds. While the controlling process, the relay output changes his state depends of both **"SEtP"** and **"SEt2"** thresholds in similar way as it was described in one threshold mode.

If two threshold mode is used, **"modE"** parameter defines state of the relay output when the input value occurs in a particular zone defined by ***border values*** of both **thresholds**. The relay can be turned on if the input value is contained in ***zone A*** (**"modE" = "in"**) or ***zone B*** (**"modE" = "out"**) and turned off if it is contained in the second one (Figure 6.5).

*The sequence of thresholds "SEtP" and "SEt2" can be set in any order, due to the control of relay outputs is done depend on difference between thresholds values (zone A ) and outside of threshold values (zone B).*

## 7. DEVICE PROGRAMMING

The device menu allow user to set all parameters connected to operation of measurement input, control modes, critical situations behaviour, communication via RS-485 and access settings. The meaning of the particular parameters is described in paragraph ***MENU DESCRIPTION***.

Some of the parameters can be accessed without menu entering (quick view mode). After pressing **[^]** or **[v]** button, name of the threshold (e.g.**"rEL1"**) and his value will be displayed on the display in alternating mode. If **[^]** or **[v]** will be pressed in 5 sec again, the next threshold will be displayed, else the device comes back to the measurement mode. If a ***free access*** is enabled (see description of ***"SECu" menu***), user can change the value of particular threshold pressing button **[ENTER]** (see: ***PARAMETERS EDITION***).

If particular parameter has been changed and confirmed in quick view mode, its new value is displayed in alternating mode with parameter name by few seconds. Confirmed changes may be checked or user can switch viewed parameter pressing **[^]** or **[v]** button.

### 7.1. PROGRAMMING MENU

To enter main menu (being in the measurement mode) operator must to press and hold at least 2 sec. **[ESC/MENU]** button.

If the user password is defined (see parameter **"Scod"**, menu ***"SECU"***), operator have to enter correct one before proceeding to menu options . Entering of the passwords is similar to the edition of numeric parameters (see: ***PARAMETERS EDITION*** ), however presently editing digit is showed only on the display, other digits are replaced by "-" sign.

After entering of last digit of the password first menu position will be displayed (if the password is correct) or warning "**Err**" in other case.

Pay attention when device parameters are being changed. If it is possible, turn off controlled installation (machine).

***Functions of the buttons while sub-menu and parameters choice:***



Selection of sub-menu or parameter for editing. Name of selected item (sub-menu or parameter) is displayed.




Operation of **[ENTER]** button depend on present menu position:
- if the name of some sub-menu is displayed - enter this sub-menu; name of the first parameter (or next level sub-menu) is displayed,
- if the name of some parameter is displayed - enter the edition of this parameter; present value of the parameter is displayed,




**[ESC/MENU]** button allow user to exit present menu level and goes to upper level menu (or measurement mode).



After about 1 min. since last use of the buttons, device exits the menu mode and returns to the measurement mode (only if no parameters are in editing mode).

## *7.2. PARAMETERS EDITION*

To start edition of any parameter user should select name of desired one using **[^] [v]** buttons and then press **[ENTER]**.

### *7.2.1. Numeric parameters (digit change mode)*

Numerical parameters are displayed as decimal numbers. The mode of its new value entering depends on chosen edit method ( see parameter „**Edit**").

In mode "by digit" („**Edit**"="**dig**") pressing one of the keys **[^]** or **[v]** causes change of current position (flashing digit) or the sign (+/-). Short pressing of the **[ENTER]** button causes change of the position (digit).

Press **[ENTER]** at least 2 seconds to accept the changes, after that question **"SEt?"** is displayed, and user must to confirm (or cancel) the changes. To conform changes (and story it in EEPROM) press **[ENTER]** button shortly after **"SEt?"** is displayed. To cancel the changes press **[ESC]** button shortly after **"SEt?"** is displayed. After that device returns to the menu.

### *7.2.2. Numeric parameters (slide change mode)*

In "slide change" mode („**Edit**"="**Slid**"), buttons **[^]** and **[v]** has different functions.

To increase edited value press (or press and hold) **[^]** button only, the increasing became quickest as long as button **[^]** is pressed. To slow down the increasing, button **[v]** can be used. If **[v]** is pressed shortly (and button **[^]** is still pressed), increasing slow down for a moment only, if **[v]** is pressed and held while button **[^]** is still pressed the increasing slow down and will be kept on lower speed.

To decrease edited value press (or press and hold ) **[v]** button only. The decreasing became quickest as long as button **[v]** is pressed. To slow down the decreasing, button **[^]** can be used. If **[^]** is pressed shortly (and button **[v]** is still pressed), decreasing slow down for a moment only, if **[^]** is pressed and held while button **[v]** is still pressed the decreasing slow down and will be kept on lower speed.

Press **[ENTER]** at least 2 seconds to accept the changes, after that question **"Set?" is** displayed, and user must to confirm (or cancel) the changes. To conform changes (and story it in EEPROM) press **[ENTER]** button shortly after **"SEt?"** is displayed. To cancel the changes press **[ESC]** button shortly after **"SEt?"** is displayed. After that device returns to the menu.

### *7.2.3. Switch parameters ("LIST" type)*

Switch parameters can be described as a sets of values (a lists) out of which only one of the options available on the list can be selected for the given parameter. Options of switching parameter are selected using **[^]**, **[v]** keys.

Short pressing of **[ENTER]** causes in displaying of the acknowledge question (**"SEt?"**). If key **[ENTER]** is pressed again, the changes are accepted, stored in EEPROM end the edition process finished. Pressing the key **[ESC]** after **"SEt?"** causes in cancelling of made changes and returning to menu.

***Functions of buttons when editing numeric and switching parameters:***



While editing numeric parameter:
- change of current (flashing) digit
- slide change of value (acceleration, deceleration, direction change)

While editing switch parameter - selection of switch parameter.




If numerical parameter is being edited, a short press of **[ENTER]** button change edited position. A long press of **[ENTER]** button (at lest 2 sec.) causes of display a **"SEt?"** ask, which allow user to make sure if change of the parameter value is correct. If switch parameter is being edited, a short press of **[ENTER]** button causes of display a **"SEt?"** ask. When **[ENTER]** button is pressed again (while **"SEt?"** is displayed) the new value of the parameter is stored in EEPROM memory.




Pressing this button operator can cancel the changes done up to now (if they were not approved by **[ENTER]** button after the **"SEt?"** ask) and come back to menu

## *7.3. MENU DESCRIPTION*

**"- - - -"** - password checking. If some password different from „**0000**" is set, then every enter to main menu follows the entering of password. If entered password is correct then first menu position will be displayed else warning "**Err**", and unit returns to measurement mode.

Due to problem with direct displaying of "**m**" and "**K**" letters, they are exchanged with special signs " ⊓̄ " for "m" and " ⊦ " for K respectively. However, in user manual letters „**m**" and "**K**" are used to make it more readable (example: **"modE", "tc K"**).

### *7.3.1. "rEL1" menu*

This menu allows to configure the operation mode of relays and LEDs marked „**R**" (e.g. „**R1**").

If there are few relay outputs available, then every output has its own configuration menu (e.g. menu „**rEL2**" for relay (LED) „**R2**"). Principle of the relays operation is described in paragraph ***CONTROL OF THE RELAY OUTPUTS***.

- The relay outputs and LEDs (named **R**) can be controlled depend on both - the current value and the peak value (when peak detection is active) of the input signal.
- If device is not equipped with one or more relay outputs, menus refer to this relays are available, but apply to LED indicators only. In such case LEDs indicates exceeding of particular thresholds.

**"SEtP"** - first threshold of the relay (range -999 ÷ 9999). Negative values can be input by selecting a "-" sign on first digit (to change value use **[^]** and **[v]** buttons). **Threshold is the medium value of relay hysteresis.**

**"SEt2"** - second threshold of the relay (range -999 ÷ 9999). Negative values can be input by selecting a "-" sign on first digit ( to change value use **[^]** and **[v]** buttons). This threshold is accessible when **"modE"** parameter is set to **„in"** or **„out"** value. **Threshold is the medium value of relay hysteresis.**

**"HYSt"** - hysteresis of relay (range 0 ÷ 999). Full hysteresis of the relay is equal to 2x **"HYSt"** parameter. The relay state can change when an input signal is out of **threshold-hysteresis** to **threshold+hysteresis** zone.

Presented parameters should be set to ensure that **"SEtP" + "HYSt", "SEt2" + "HYSt", "SEtP" - "HYSt"** or **"SEt2" - "HYSt"** does not exceed the measure range. Additionally, in two threshold mode ("**modE**"= „**in**" or „**out**"), the hysteresis for both thresholds must not cover each other (in other case relay can't change his state).

**"modE"** - relay operation mode:

***"noAC"*** - the relay is not active (permanent turned off)

***"on"*** - one threshold mode, the relay is turned **ON** when input signal exceeds **SEtP** + **HYSt** value**,** and is turned off back when the input signal became lower than **SEtP – HYSt**,

***"oFF"*** - one threshold mode, the relay is turned **OFF** when input signal exceeds **SEtP** + **HYSt** value**,** and is turned on back when the input signal became lower than **SEtP – HYSt**,

***"in"*** - two threshold mode, the relay is turned **ON** when the input signal is bigger than "***lower threshold*** + **HYSt**" and lower than "***bigger threshold*** – **HYSt**", and turned off when the input signal is contained in the second zone. The ***bigger threshold*** means bigger one of **"SEtP"** and **"SEt2"** thresholds, the ***lower threshold***" means lower one of **"SEtP"** and **"SEt2"** thresholds.

***"out"*** - two threshold mode, relay is turned **ON** when the input value is bigger than "***bigger threshold*** + **HYSt"** and lower than "***lower threshold*** – **HYSt"**, and turned on when the input signal is contained in the second zone. The ***bigger threshold*** means bigger one of **"SEtP"** and **"SEt2"** thresholds, the ***lower threshold***" means lower one of **"SEtP"** and **"SEt2"** thresholds.

***"modb"*** - the relay is controlled via RS-485 interface, independently on the input signal.

- **LEDs light when relays are closed**, independently of relays' mode.
- When power supply fail, unit do not store relays state selected by RS-485 interface.

**"t on"** - turn on delay time, the relay is turned on with delay equal **"t on"** if the input value exceeds appropriate ***border value*** (defined with ***threshold*** and ***hysteresis***), at least **"t on"** time. **"t on"** range 0 ÷ 99.9, defined with 0.1 sec. resolution. Unit of this parameter is set by **"unit"** parameter.

**"toFF"** - turn off delay time, the relay is turned off with delay equal **"toFF"** if the input value exceeds appropriate ***border value*** (defined with ***threshold*** and ***hysteresis***), at least **"toFF"** time. **"toFF"** range 0 ÷ 99.9, defined with 0.1 sec. resolution. Unit of this parameter is set by **"unit"** parameter.

If time when the input signal exceeds some border value is shorter than **"t on"** or **"toFF"** time, the relay do not change its state (see paragraph: ***CONTROL OF THE RELAY OUTPUTS***).

**"unit"** - unit of time for **"t on"** i **"toFF"** parameters. Can be set on one of two values:

***"min"*** - minutes,
***"SEC"*** - seconds.

**"AL"** - this parameter defines the relay reaction when some critical situations occurs:

***"noCH"*** - relay do not change his state,
***"on"*** - relay will be turned on,
***"oFF"*** - relay will be turned off.

If parameter **"modE"** is set to **"on"** , **"oFF"**, **"in"** or **"Out"** the "critical situation" means that allowable measurement range is exceeded.
If parameter **"modE"** is set to **"modb"**, the "critical situation" means communication delay (when no data is received) longer than **"mbtO"** parameter (see description: ***"rS" menu***).

- If option "**noCH**" is selected for **"AL"** parameter, behaviour of the relay may depend on "FiLt" parameter in some cases. If "FiLt" is set to big value and the input signal drops, result value of the measure will change slow, causes of turning on or off relay due to thresholds values. The critical situation is slowly detected, so it is impossible to predict the relay state in that situations.
- If parameter „**AL**" = „**on**", the relay will be turned on in the critical situations, even if his parameter ***"modE" = "noAC".***

### *7.3.2. "inPt" menu*

This menu presets the measurement input:

"**tYPE**" - type of the input / sensor. This parameter can be set to values:
- *"**Pt 1**"* - Pt-100 input,
- *"**Pt 5**"* - Pt-500 input,
- *"**Pt10**"* - Pt-1000 input.

**"FiLt"** - this parameter sets filtration rate. It can be set to values from 0 (no filtration ) to 5 (strongest filtration – time window about 2 sec).

**"toFS"** - offset (expressed in 0.1°C, range ± 9.9°C.). This parameter allows shifting of measurement scale, and express value added to calculated (measured) result.

### *7.3.3. "OutP" menu*

This menu contains parameters of analogue output control. Menu is available if the device is equipped witch analogue output.

Analogue output can be controlled depend on both present measured value and peak value (if peak detection is enabled).

**"Omod"** - analogue output mode. Depending on version of the device there are following options:

For active current output:
- *"**oFF**"* - current output disabled,
- *"**0-20**"* - current output enabled with 0 ÷ 20 mA mode,
- *"**4-20**"* - current output enabled with 4 ÷ 20 mA mode,
- *"**modb**"* - current output controlled via RS-485 interface.

For passive current output:
- *"**oFF**"* - current output disabled,
- *"**4-20**"* - current output enabled with 4 ÷ 20 mA mode,
- *"**modb**"* - current output controlled via RS-485 interface.

For active voltage output:
- *"**oFF**"* - voltage output disabled,
- *"**0-5**"* - voltage output enabled with 0 ÷ 5V mode,
- *"**1-5**"* - voltage output enabled with 1 ÷ 5V mode,
- *"**0-10**"* - voltage output enabled with 0 ÷ 10V mode,
- *"**2-10**"* - voltage output enabled with 2 ÷ 10 V mode,
- *"**modb**"* - voltage output controlled via RS-485 interface.

**"OUtL"** - this parameter determines the input value for which the output signal is **minimal** (depend of output mode „**Omod**").

**"OUtH"** - this parameter determines the input value for which the output signal is **maximal** (depend of output mode „**Omod**").

The analogue output value is calculated due to formula given below:

$$Out = \frac{W - "OUtL"}{"OUtH" - "OUtL"} \times (B - A) + A$$

where: **W** – displayed value,
**Out** – analogue output value,
**B** – higher range limit (20mA / 5V / 10V),
**A** – lower range limit (0mA / 4mA / 0V / 1V / 2v),

"**OutL**" parameter can be greater than "**OutH**". In this case the conversion characteristic is reversed, it means that if input value raises the output value falls.

"**Lo r**", "**Hi r**" - this parameters define the output value range. If calculated output value **Out** exceeds defined range then analogue output generates signal equal to upper or lower border of the defined range. These parameters defines the percentage extension of nominal analogue range (with 0,1% resolution).

Parameter "**Lo r**" defines lower border of the range due to formula:
$\mathbf{Out}_{min}$ = **A** - (**A** × "**Lo r**" %), where:
**A** – lower signal value range limit.

This parameter can be set from 0 to 99.9% (for active current output and active voltage output) or from 0 to 29.9% (for passive current output).

Parameter **"Hi r"** defines higher border of the range due to formula:
$\mathbf{Out}_{max}$ = **B** + (**B** × "**Hi r**" %), where:
**B** – higher signal value range limit.
This parameter can be set from 0 to 19.9% (for active and passive current output) or from 0 to 9.9% (for active voltage output).

In example on page **34** of the ***DISPLAY VALUES CALCULATION*** paragraph the procedure of the analogue outputs determining is presented in details.

"**AL**" - this parameter determines the behaviour of analogue output if any critical situation occurs. According to version of the device, this parameter can be set:

For active current output:
***"noCH"*** - current will not change,
***"22.1"*** - current will be set to 22.1 mA,
***"3.4"*** - current will be set to 3.4 mA,
***"0.0"*** - current will be set to 0 mA.

For passive current output:

***"noCH"*** - current will not change,
***"22.1"*** - current will be set to 22.1 mA,
***"3.4"*** - current will be set to 3.4 mA,

For active voltage output:

***"noCH"*** - voltage will not change,
***"11.0"*** - voltage will be set to 11 V,
***"5.5"*** - voltage will be set to 5.5 V,
***"1.2"*** - voltage will be set to 1.2 V.
***"0.6"*** - voltage will be set to 0.6 V,
***"0.0"*** - voltage will be set to 0 V.

When the critical situation goes, the output signal will be set to value calculated due to formulas given above.

### *7.3.4. "bri" parameter*

This parameter allows user to set bright of the LED display, bright can be set to conventional values from 1 to 8.

### *7.3.5. "HOLd" menu*

This menu contains parameters connected with peak detection function. See also full description of the peak detection function in paragraph: ***DETECTION OF THE PEAK VALUES***

**"modE"** - the type of detected changes of the input signal, can be set to values:

***"norm"*** - peaks, peak and next drop of the input signal of value equal at least **"PEA"**,
***"inv"*** - drops, drop and next peak of the input signal of value equal at least **"PEA"**,

**"PEA"** - minimal detected signal change classified as peak or drop (see Figure 6.1)

**"timE"** - maximum time of displaying of the peak (drop) value, can be set from 0.0 to 19.9 sec, with 0.1 sec. resolution. If „**HdiS**"="**HOLD**" then setting parameter **"timE"=0.0** causes holding peak value until **[ESC]** button is pressed. If „**HdiS**"="**rEAL**" then value **"timE"=0.0** means no holding.

**"HdiS"** - type of displayed values:

***"rEAL"*** - current value is displayed,
***"HOLd"*** - peak (drop) value is displayed,

**"H r1", "H r2"** - relay/LED outputs ( R1, R2) operation mode:

***"rEAL"*** - relay/LED operates depend on the current value,
***"HOLd"*** - relay/LED operates depend on the peak (drop) value.

**"HOUt"** - current output operation mode:

***"rEAL"*** - current output operates depend on the current value,
***"HOLd"*** - current output operates depend on the peak (drop) value.

### *7.3.6. "SECu" menu*

This menu contains presets connected with availability of other parameters:

**"Scod"** - user password (4-digits number). If this parameter is set at value **"0000"**, user password is turned off.

**If the user do not remember his password, the access to the menu is possible by the "one-use password". To get this password please contact with Marketing Division. "Single use password" can be used only one time, after that it is destroyed. Entering this password causes in clearing of user password, it means sets the user password to „0000".**

The "one-use password" can be used **ONE TIME ONLY**, it is impossible to use it again! The "one-use password" can be restored by Service Division only.

**"A r1, A r2"** - this option permits user (**"on"**) or prohibits (**"oFF"**) to modify the thresholds of the relays/LEDs R1, R2 without knowledge about user password.

### *7.3.7. "rS" menu*

This menu is connected with RS-485 interface, and sets his properties:

**"Addr"** - this parameter defines the address of the device, accordingly to Modbus protocol. It can be set in range from 0 to 199. If the value 0 is set then device, responds to frames with address 255 (FFh).

**"bAud"** - this parameter determines RS-485 interface baud rate. It can be set to one of 8 possible values: **"1.2"**, **"2.4"**, **"4.8", "9.6"**, **"19.2"**, **"38.4"**,**"57.6"**,**"115.2"**, which respond to the baud rates of 1200, 2400, 4800, 9600, 19200, 38400, 57600 and 115200 bit/s respectively.

**"mbAc"** - this parameter sets the access to the configuration registers of the device.
Possible values:
***"on"*** - configuration registers can be set via RS-485 interface,
***"oFF"*** - configuration registers can not be set via RS-485 interface.

The access to registers no 04h i 05h cant be denied by **"mbAc"** parameter (see: ***LIST OF REGISTERS***).

**"mbtO"** - this parameter defines maximal time (sec) between following frames received by the device. If the delay will be greater than the value of **"mbtO"** parameter, the relays and analogue outputs which are controlled via RS-485 interface, will set to alert state (see ***"OUtP" menu,*** and ***"rEL1" menu*** description). Parameter "**mbtO**" can be set to values from 0 to 99 seconds. The value 0 means that the time will be not controlled.

**"rESP"** - this parameter defines minimal (additional) delay between the Modbus message and the answer of the device (received and sent via RS-485 interface). This additional delay allows the device to work with poor RS-converters which do not works properly on baud rates higher than 19200. This parameter can be set to one of values:

***"Std"*** - answer as quick as possible, no additional delay

***" 10c"***
***" 20c"***
***" 50c"***
***"100c"***
***"200c"*** } - answer delayed of 10, 20, 50, 100 of 200 chars respectively, where one character time depends on selected baud rate

In the most cases parameter **"rESP"** should be set to **"Std"** (no additional delay). Unfortunately for some third party RS-converters **"rESP"** should be adjusted experimentally. Table 7.1 contains most frequently used values.

| ***"bAud" parameter*** | "38.4" | "57.6" | "115.2" |
|---|---|---|---|
| ***"rESP" parameter*** | " 10c" | " 20c" | " 50c" |

*Tab.7.1. Settings of **"rESP"** parameter*

### ***7.3.8. "Edit" parameter***

This parameter allows to change the edition mode of numerical parameters:
***"dig"*** - the change to "by digit" mode,
***"Slid"*** - slide change mode.

### ***7.3.9. "dEFS" parameter***

This setting allows to restore the factory settings of the device. To get the access to this option special password is required: „5465", next the device displays acknowledge question **„SEt?"**. Press **[ENTER]** to acknowledge the restoring of factory settings or **[ESC]** to cancel.

### ***7.3.10. "SErv" menu***

This menu contains the parameters for authorized service only. To enter this menu proper service password must be entered. Improper settings can causes of damage of the device.

## 7.4. MENU STRUCTURE

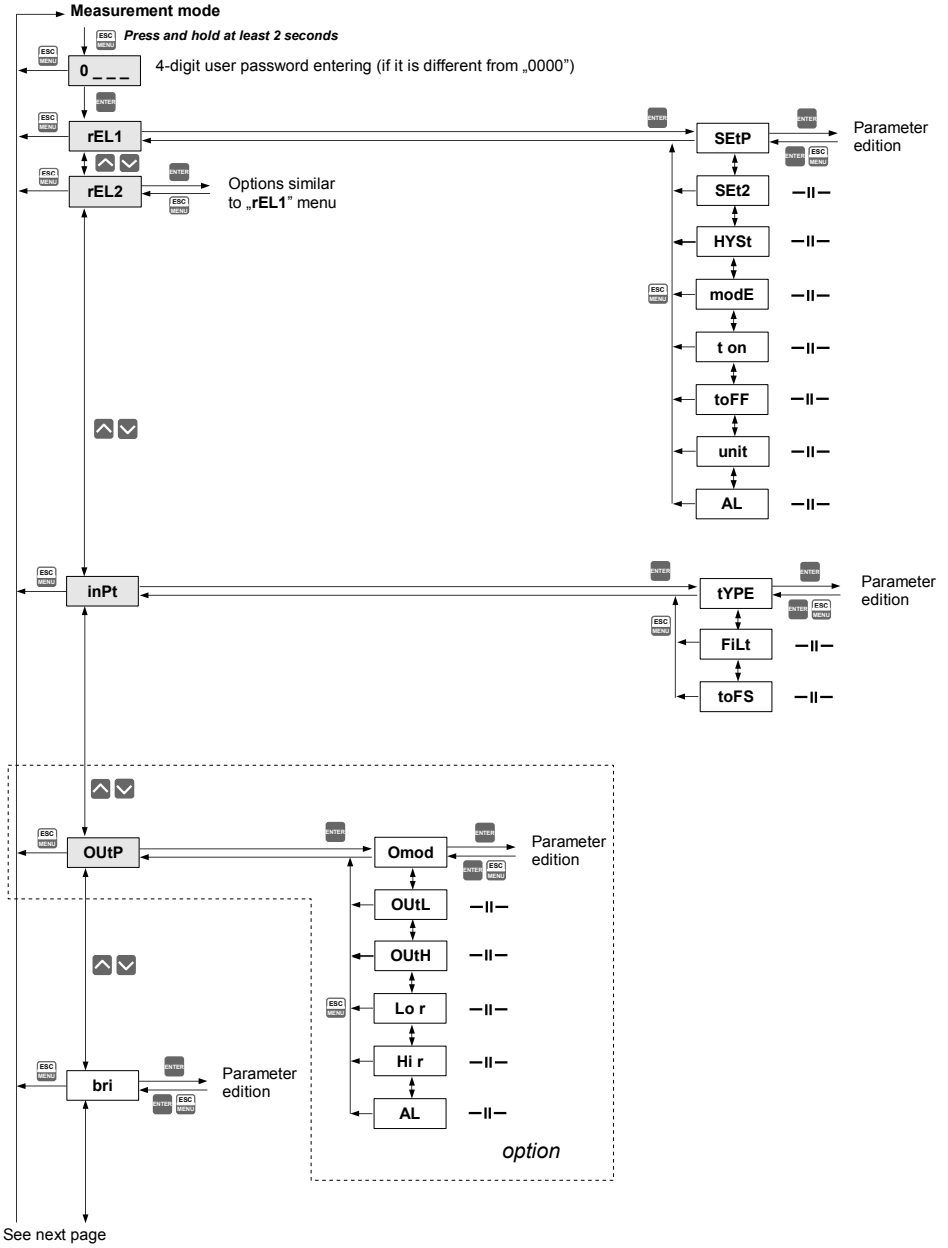

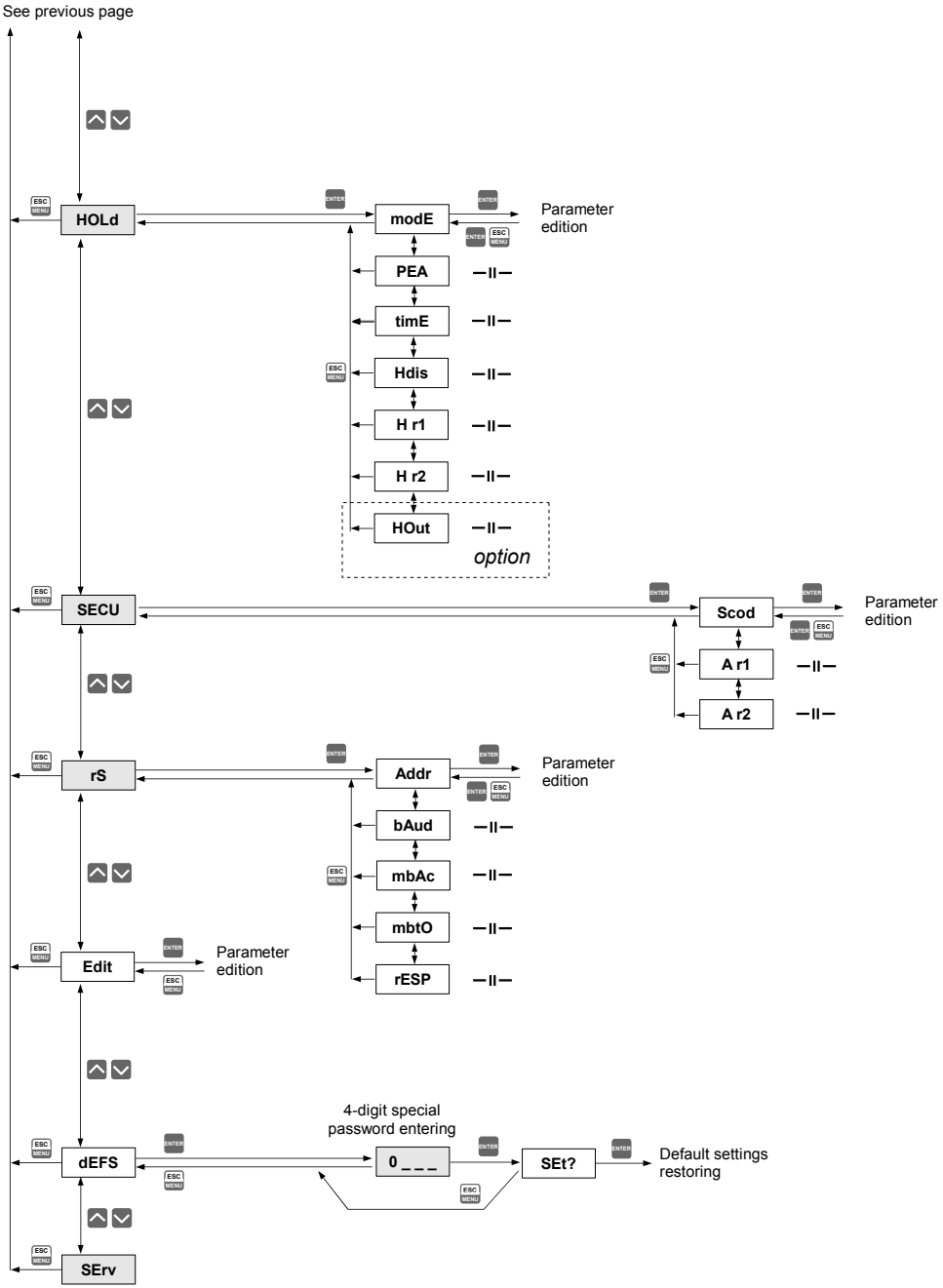
See previous page
HOLd
modE
Parameter edition
PEA
timE
Hdis
H r1
H r2
HOut
option
SECU
Scod
Parameter edition
A r1
A r2
rS
Addr
Parameter edition
bAud
mbAc
mbtO
rESP
Edit
Parameter edition
4-digit special password entering
dEFS
0 _ _ _
SEt?
Default settings restoring
SErv

## 8. THE ALARM LED

Alarm LED (**AL**) lights in cases:
- exceeding of ***permissible measurement range***
- detection of sensor malfunction (shortcut or break of measurement circuit)

## 9. ANALOGUE OUTPUT VALUE CALCULATION

Lets assume that we have active current output and its parameters are:
**"modE" = "4-20"**, **"OUtL"** = 100, **"OUtH"** = 200, **"Lo r"** = 5.0, **"Hi r"** = 5.0
Parameters **"Lo r"** and **"Hi r"** define working range of current output to 3.8 ÷ 21 mA.
Output current will be calculated for three displayed values „D":

a) D = „17.5"
According to formula from page 28:
$I_{out}$ = (17.5-10.0) / (20.0-10.0) × 16 mA + 4 mA = 0.75 ·16 + 4 = 16 mA

Calculated $I_{out}$ do not exceeds the output working range (3.8 - 21 mA).

b) D = „20.5"
According to formula from page 28:
$I_{out}$ = (20.5-10.0) / (20.0-10.0) × 16 mA + 4 mA = 1.05 ·16 + 4 = 20.08 mA
Calculated $I_{out}$ do not exceeds the output working range (3.8 - 21 mA).

c) D = „30.0"
According to formula from page 28:
$I_{out}$ = (30.0-10.0) / (20.0-10.0) × 16 mA + 4 mA = 2 ·16 + 4 = 36 mA.
Calculated $I_{out}$ exceeds the output working range (3 - 21 mA), so current output will generate current equal to the upper border of range defined by parameter **"Lo r"** and **"Hi r"** (it means 21 mA).

## 10. THE MODBUS PROTOCOL HANDLING

Transmission parameters: 1 start bit, 8 data bits, 1 or 2 stop bit (2 bits are send, 1 and 2 bits are accepted when receive), no parity control
Baud rate: selectable from: 1200 to 115200 bits/second
Transmission protocol: MODBUS RTU compatible

The device parameters and display value are available via RS-485 interface, as HOLDING-type registers (numeric values are given in U2 code) of Modbus RTU protocol. The registers (or groups of the registers) can be read by 03h function, and wrote by 06h (single registers) or 10h (group of the registers) accordingly to Modbus RTU specification. Maximum group size for 03h and 10h functions can not exceeds 16 registers (for single frame).



The device interprets the broadcast messages, but then do not sends the answers.

### 10.1. LIST OF REGISTERS

| Register | Write | Range | Register description |
|---|---|---|---|
| 01h | No | -999 ÷ 6000 | Measurement value (no decimal point) |
| 02h | No | 0h, A0h, 60h | The status of the current measurement; **0h** - data valid; **A0h** - top border of the measurement range is exceeded; **60h** - bottom border of the measurement range is exceeded; |
| 03h | No | 1 | Decimal point position, constant value: **1** - " **0.0**"; |
| 04h | Yes | see descr. | State of the relays and alarm LED (binary format)<br>(1 - on, 0 - off): **00000000 000e00ba**<br>**a** - relay R1; **b** - relay R2; **e** - alarm LED;<br>If written, only **a**, **b** bits are important (others are ignored) these bits allows user to control the relays via RS-485 interface |
| 05h[1] | Yes | 0h ÷ 1800h | State of active current output, expressed in 1/256 mA units – it means that high byte express integer part, and low byte fractional part of desired output current. |
| | Yes | 2CCh÷1800h | State of passive current output, expressed in 1/256 mA units – it means that high byte express integer part, and low byte fractional part of desired output current. |
| | Yes | 0h ÷ 1600h | State of active voltage output, expressed in 1/512 V units – it means that high byte express integer part, and low byte fractional part of desired output voltage. |
| 06h | No | -999 ÷ 6000 | Peak (drop) value (no decimal point) |
| 10h | Yes | 0 ÷ 2 | "**tyPE**" parameter in "**InPt**" menu (input type).<br>**0** - Pt-100; **1** - Pt-500; **2** - Pt-1000 |
| 12h | Yes | 0 ÷ 5 | "**FiLt**" parameter in "**InPt**" menu (measurement filtering rate) |
| 18h | Yes | -99 ÷ 99 | "**toFS**" parameter in "**InPt**" menu (shift of measurement scale), expressed by 0,1°C |
| 20h[2] | Yes | 0 ÷ 199 | Device address |
| 21h | No | 21B0h | Device identification code (ID) |
| 22h[3] | Yes | 0 ÷ 7 | **"bAud"** parameter in **"rS"** menu (baud rate);<br>**0** - 1200 baud; **1** - 2400 baud; **2** - 4800 baud; **3** - 9600 baud;<br>**4** - 19200 baud; **5** - 38400 baud; **6** - 57600 baud; **7** - 115200 baud |
| 23h[4] | Yes | 0 ÷ 1 | **"mbAc"** parameter in **"rS"** menu (permission to write registers via RS-485 interface); **0** - write denied ; **1** - write allowed |
| 24h | Yes | see descr. | Parameters of "**SECU**" menu (binary format (0 - „**oFF**", 1 - „**on**"):<br>**bit 0** - "**A r1**" parameter; **bit 1** - "**A r2**" parameter |
| 25h | Yes | 0 ÷ 5 | **"rESP"** parameter in **"rS"** menu (additional response delay);<br>**0** - no additional delay; **1** - "**10c**" option; **2** - "**20c**" option;<br>**3** - "**50c**" option; **4** - "**100c**" option; **5** - "**200c**" option; |
| 27h | Yes | 0 ÷ 99 | **"mbtO"** parameter in **"rS"** menu (maximum delay between received frames); **0** - no delay checking;<br>**1** ÷ **99** - maximum delay expressed in seconds |
| 2Dh | Yes | 1 ÷ 8 | "**bri**" parameter (display brightness);<br>**1** - the lowest brightness; **8** - the highest brightness |

| Register | Write | Range | Register description |
|---|---|---|---|
| 2Fh | Yes | 0 ÷ 1 | "**Edit**" parameter (numerical parameters edit mode);<br>**0** - „**dig**" mode; **1** - „**SLid**" mode |
| 30h | Yes | -999 ÷ 9999 | "**SEtP**" parameter in "**rEL1**" menu, no decimal point included |
| 31h | Yes | -999 ÷ 999 | "**HySt**" parameter in "**rEL1**" menu, no decimal point included |
| 32h | Yes | 0 ÷ 5 | "**modE**" parameter in "**rEL1**" menu:<br>**0** - "**noAC**" mode; **1** - "**on**" mode; **2** - "**oFF**" mode; **3** - "**in**" mode;<br>**4** - "**out**" mode; **5** - "**modb**" mode |
| 33h | Yes | 0 ÷ 999 | **"t on"** parameter in **"rEL1"** menu, expressed in tenth of seconds or tenth of minutes depend on **"unit"** parameter - register no. 35h) |
| 34h | Yes | 0 ÷ 999 | **"toFF"** parameter in **"rEL1"** menu, expressed in tenth of seconds or tenth of minutes depend on **"unit"** parameter - register no. 35h) |
| 35h | Yes | 0 ÷ 1 | **"unit"** parameter in **"rEL1"** menu:<br>**0** - seconds; **1** - minutes |
| 36h | Yes | 0 ÷ 2 | **"AL"** parameter in **"rEL1"** menu: **0** - no changes; **1** - on; **2** - off |
| 37h | Yes | -999 ÷ 9999 | "**SEt2**" parameter in "**rEL1**" menu, no decimal point included |
| 38h | Yes | -999 ÷ 9999 | "**SEtP**" parameter in "**rEL2**" menu, no decimal point included |
| 39h | Yes | -999 ÷ 999 | "**HySt**" parameter in "**rEL2**" menu, no decimal point included |
| 3Ah | Yes | 0 ÷ 5 | "**modE**" parameter in "**rEL2**" menu:<br>**0** - "**noAC**" mode; **1** - "**on**" mode; **2** - "**oFF**" mode; **3** - "**in**" mode;<br>**4** - "**out**" mode; **5** - "**modb**" mode |
| 3Bh | Yes | 0 ÷ 999 | **"t on"** parameter in **"rEL2"** menu, expressed in tenth of seconds or tenth of minutes depend on **"unit"** parameter - register no. 3Dh) |
| 3Ch | Yes | 0 ÷ 999 | **"toFF"** parameter in **"rEL2"** menu, expressed in tenth of seconds or tenth of minutes depend on **"unit"** parameter - register no. 3Dh) |
| 3Dh | Yes | 0 ÷ 1 | **"unit"** parameter in **"rEL2"** menu:<br>**0** - seconds; **1** - minutes |
| 3Eh | Yes | 0 ÷ 2 | **"AL"** parameter in **"rEL2"** menu: **0** - no changes; **1** - on; **2** - off |
| 3Fh | Yes | -999 ÷ 9999 | "**SEt2**" parameter in "**rEL2**" menu, no decimal point included |
| 50h | Yes | 0 ÷ 1 | "**modE**" parameter in "**HOLd**" menu (type of detected changes):<br>**0** - peaks; **1** - drops |
| 51h | Yes | 0 ÷ 9999 | "**PEA**" parameter in "**HOLd**" menu (minimum detectable change, no decimal point included) |
| 52h | Yes | 0 ÷ 199 | "**timE**" parameter in "**HOLd**" menu, maximum peaks' (or drops') display time expressed in seconds |
| 53h | Yes | 0 ÷ 1 | "**HdiS**" parameter in "**HOLd**" menu:<br>**0** - "**rEAL**" mode ; **1** - "**HOLd**" mode |
| 54h | Yes | 0 ÷ 1 | "**H r1**" parameter in "**HOLd**" menu :<br>**0** - "**rEAL**" mode ; **1** - "**HOLd**" mode |
| 55h | Yes | 0 ÷ 1 | "**H r2**" parameter in "**HOLd**" menu:<br>**0** - "**rEAL**" mode ; **1** - "**HOLd**" mode |

| *Register* | *Write* | *Range* | *Register description* |
|---|---|---|---|
| 58h[1] | Yes | 0 ÷ 1 | "**HOUt**" parameter in "**HOLd**" menu:<br>**0** - "**rEAL**" mode ; **1** - "**HOLd**" mode |
| A0h[1] | Yes | 0 ÷ 3 | "**Omod**" parameter in "**OUtP**" menu (active current output mode)<br>**0** - current output disabled; **1** - current output enabled with **4÷20mA** mode; **2** - current output enabled with **0÷20mA** mode;<br>**3** - current output controlled via RS-485 interface |
| | Yes | 0 ÷ 2 | "**Omod**" parameter in "**OUtP**" menu (passive current output mode)<br>**0** - current output disabled; **1** - current output enabled with **4÷20mA** mode; **2** - current output controlled via RS-485 interface |
| | Yes | 0 ÷ 5 | "**Omod**" parameter in "**OUtP**" menu (active voltege output mode)<br>**0** - voltage output disabled; **1** - voltage output enabled with **0÷5V** mode; **2** - voltage output enabled with **1÷5V** mode; **3** - voltage output enabled with **0÷10V** mode; **4** - voltage output enabled with **2÷10V** mode; **5** - voltage output controlled via RS-485 interface |
| A1h[1] | Yes | -999 ÷ 9999 | "**OUtL**" parameter in "**OUtP**" menu, no decimal point included |
| A2h[1] | Yes | -999 ÷ 9999 | "**OUtH**" parameter in "**OUtP**" menu, no decimal point included |
| A3h[1] | Yes | 0 ÷ 999 | "**Lo r**" parameter in "**OUtP**" menu, for active current output and active voltage output, expressed in 0.1% |
| | Yes | 0 ÷ 299 | "**Lo r**" parameter in "**OUtP**" menu for passive current output, expressed in 0.1% |
| A4h[1] | Yes | 0 ÷ 199 | "**Hi r**" parameter in "**OUtP**" menu for active and passive current output, expressed in 0.1% |
| | Yes | 0 ÷ 99 | "**Hi r**" parameter in "**OUtP**" menu for active voltage output, expressed in 0.1% |
| A5h[1] | Yes | 0 ÷ 3 | "**AL**" parameter in "**OUtP**" menu (active current output value on critical exception): **0** - no change; **1** - 22.1 mA; **2** - 3.4 mA; **3** - 0 mA |
| | Yes | 0 ÷ 2 | "**AL**" parameter in "**OUtP**" menu (passive current output value on critical exception): **0** - no change; **1** - 22.1 mA; **2** - 3.4 mA |
| | Yes | 0 ÷ 5 | "**AL**" parameter in "**OUtP**" menu (active voltage output value on critical exception): **0** - no change; **1** - 11 V; **2** - 5.5; **3** - 1.2 V;<br>**4** - 0.6 V; **5** - 0 V |

1 - these registers are active only if device is equipped with current or voltage output.
2 - after writing to register no 20h the device responds with an "old" address in the message.
3 - after writing to register no 22h the device responds with the new baud rate.
4 - the value of the "**mbAc**" parameter is also connected to write to this register, so it is possible to block a writes, but impossible to unblock writes via RS-485 interface, The unblocking of the writes is possible from menu level only.

## 10.2. TRANSMISSION ERRORS DESCRIPTION

If an error occurs while write or read of single register, then the device sends an error code according to Modbus RTU specifications (example message no 1).

Error codes:
**01h** - illegal function (only functions 03h, 06h and 10h are available),
**02h** - illegal register address
**03h** - illegal data value
**08h** - no write permission ( see: "**mbAc**" parameter)
**A0h** - exceed of upper border of input range
**60h** - exceed of lower border of input range
A0h and 60h codes can appear only during reg. 01h is reading by 03h function (read of a single register).

## 10.3. EXAMPLES OF QUERY/ANSWER FRAMES

Examples apply for device with address 1. All values are represent hexadecimal.

**Field description:**

| | |
|---|---|
| **ADDR** | Device address on modbus network |
| **FUNC** | Function code |
| **REG H,L** | Starting address (address of first register to read/write, Hi and Lo byte) |
| **COUNT H,L** | No. of registers to read/write (Hi and Lo byte) |
| **BYTE C** | Data byte count in answer frame |
| **DATA H,L** | Data byte (Hi and Lo byte) |
| **CRC L,H** | CRC error check (Hi and Lo byte) |

**1. Read of the displayed value (measurement), SRT-N118 device address = 01h:**

| ADDR | FUNC | REG H,L | | COUNT H,L | | CRC L,H | |
|---|---|---|---|---|---|---|---|
| 01 | 03 | 00 | 01 | 00 | 01 | D5 | CA |

a) The answer (we assume that the measure result is not out of range):

| ADDR | FUNC | BYTE C | DATA H,L | | CRC L,H | |
|---|---|---|---|---|---|---|
| 01 | 03 | 02 | 00 | FF | F8 | 04 |

DATA H, L - displayed value = 255, no decimal point.
Decimal point position can be read from reg. 03h.

b) The answer (if an error occur):

| ADDR | FUNC | ERROR | CRC L,H | |
|---|---|---|---|---|
| 01 | 83 | 60 | 41 | 18 |

ERROR - error code = 60h, bottom border of the measurement range is exceeded

**2. Read of device ID code**

| ADDR | FUNC | REG H,L | | COUNT H,L | | CRC L,H | |
|---|---|---|---|---|---|---|---|
| 01 | 03 | 00 | 21 | 00 | 01 | D4 | 00 |

The answer:

| ADDR | FUNC | BYTE C | DATA H,L | | CRC L,H | |
|---|---|---|---|---|---|---|
| 01 | 03 | 02 | 21 | B0 | A1 | A0 |

DATA - identification code (21B0h)

**3. Change of the device address from 1 to 2 (write to reg. 20h)**

| ADDR | FUNC | REG H,L | | DATA H,L | | CRC L,H | |
|---|---|---|---|---|---|---|---|
| 01 | 06 | 00 | 20 | 00 | 02 | 09 | C1 |

DATA H - 0
DATA L - new device address (2)

The answer (the same as the message):

| ADDR | FUNC | REG H,L | | DATA H,L | | CRC L,H | |
|---|---|---|---|---|---|---|---|
| 01 | 06 | 00 | 20 | 00 | 02 | 09 | C1 |

**4. Change of baud rate of all devices connected to the net (BROADCAST message).**

| ADDR | FUNC | REG H,L | | COUNT H,L | | CRC L,H | |
|---|---|---|---|---|---|---|---|
| 00 | 06 | 00 | 22 | 00 | 04 | 29 | D2 |

DATA H - 0
DATA L - 4, new baud rate 19200 baud



Device do not reply to BROADCAST-type messages.

**5. Read of the registers 1, 2 and 3 in one message (example of reading a number of registries in one frame):**

| ADDR | FUNC | REG H,L | | COUNT H,L | | CRC L,H | |
|---|---|---|---|---|---|---|---|
| 01 | 03 | 00 | 01 | 00 | 03 | 54 | 0B |

COUNT L - the count of being read registers (max.16)

The answer:

| ADDR | FUNC | BYTE C | DATA H1,L1 | | DATA H2,L2 | | DATA H3,L3 | | CRC L,H | |
|---|---|---|---|---|---|---|---|---|---|---|
| 01 | 03 | 06 | 00 | 0A | 00 | 00 | 00 | 01 | 78 | B4 |

DATA H1, L1 - reg. 01h (10 - displayed value ”1.0”),
DATA H2, L2 - reg. 02h (0 - no errors),,
DATA H3, L3 - reg. 03h (1 - decimal point position ” 0.0”).

**There is no full implementation of the Modbus Protocol in the device. The functions presented above are available only.**

# 11. DEFAULT AND USER'S SETTINGS LIST

| *Parameter* | *Description* | *Default value* | *User's value* | *Desc. page* |
|---|---|---|---|---|
| **Parameters of relay R1 operation ("rEL1" menu)** | | | | |
| SEtP | Relay R1 threshold | 20.0 | | 25 |
| SEt2 | Relay R1 second threshold | 40.0 | | 25 |
| HYSt | Hysteresis of relay R1 | 0.0 | | 25 |
| modE | Operation mode of relay R1 | on | | 25 |
| t on | Turn on delay of relay R1 | 0.0 | | 26 |
| toFF | Turn off delay of relay R1 | 0.0 | | 26 |
| unit | Unit of **"t on"**, **"toFF"** parameters of relay R1 | SEC | | 26 |
| AL | Reaction for critical situation of relay R1 | oFF | | 26 |
| **Parameters of relay R2 operation ("rEL2" menu)** | | | | |
| SEtP | Relay R2 threshold | 40.0 | | 25 |
| SEt2 | Relay R2 second threshold | 60.0 | | 25 |
| HYSt | Hysteresis of relay R2 | 0.0 | | 25 |
| modE | Operation mode of relay R2 | on | | 25 |
| t on | Turn on delay of relay R2 | 0.0 | | 26 |
| toFF | Turn off delay of relay R2 | 0.0 | | 26 |
| unit | Unit of **"t on"**, **"toFF"** parameters of relay R2 | SEC | | 26 |
| AL | Reaction for critical situation of relay R2 | oFF | | 26 |
| **Configuration of measurement input ("inPt" menu)** | | | | |
| tYPE | Input type | „Pt 1" | | 27 |
| FiLt | Filtering ratio | 0 | | 27 |
| toFS | Shifting of measurement scale | 0.0 | | 27 |
| **Active current output configuration ("OUtP" menu)** | | | | |
| Omod | Active current output mode | „0-20" (mA) | | 27 |
| OUtL | Display value for 0 mA or 4 mA current output | 0.0 | | 28 |
| OUtH | Display value for 20 mA current output | 100.0 | | 28 |
| Lo r | Extension of the bottom of the nominal output range | 5.0 (%) | | 28 |
| Hi r | Extension of the top of the nominal output range | 5.0 (%) | | 28 |
| AL | Current output value on critical exception | 22.1 (mA) | | 28 |
| **Passive current output configuration ("OUtP" menu)** | | | | |
| Omod | Passive current output mode | „4-20" (mA) | | 27 |

| *Parameter* | *Description* | *Default value* | *User's value* | *Desc. page* |
|---|---|---|---|---|
| OUtL | Display value for 4 mA current output | 0.0 | | 28 |
| OUtH | Display value for 20 mA current output | 100.0 | | 28 |
| Lo r | Extension of the bottom of the nominal output range | 5.0 (%) | | 28 |
| Hi r | Extension of the top of the nominal output range | 5.0 (%) | | 28 |
| AL | Current output value on critical exception | 22.1 (mA) | | 28 |
| **Active voltage output configuration (“OUtP” menu)** | | | | |
| Omod | Active voltage output mode | „0-10” (V) | | 27 |
| OUtL | Display value for 0 V, 1 V or 2 V voltage output | 0.0 | | 28 |
| OUtH | Display value for 5 V or 10 V voltage output | 100.0 | | 28 |
| Lo r | Extension of the bottom of the nominal output range | 5.0 (%) | | 28 |
| Hi r | Extension of the top of the nominal output range | 5.0 (%) | | 28 |
| AL | Voltage output value on critical exception | 11.0 (V) | | 28 |
| **Display parameters** | | | | |
| bri | Display brightness | bri6 | | 29 |
| **Configuration of peaks detection function (“HOLd” menu)** | | | | |
| modE | Kind of detected changes | norm | | 29 |
| PEA | Minimum detected change | 0.0 | | 29 |
| timE | Maximum time of peak displaying | 0.0 | | 29 |
| HdiS | The type of displayed value | HOLd | | 29 |
| H r1 | Source of relay R1, and LED R1 control | rEAL | | 29 |
| H r2 | Source of relay R2, and LED R2 control | rEAL | | 29 |
| HOut | Source of current output control | rEAL | | 29 |
| **Settings of access to the configuration parameters (“SECu” menu)** | | | | |
| A r1 | Permission to changes of relay R1 threshold without of the user password knowledge | on | | 30 |
| A r2 | Permission to changes of relay R2 threshold without of the user password knowledge | on | | 30 |
| **RS 485 interface configuration (menu “rS”)** | | | | |
| Addr | Device address | 0 | | 30 |
| bAud | Baud rate | 9.6 | | 30 |
| mbAc | Permission to changes of configuration registers | on | | 30 |
| mbtO | Maximum delay between received messages | 0 | | 30 |
| rESP | Additional delay of answer transmission | Std | | 30 |

| *Parameter* | *Description* | *Default value* | *User's value* | *Desc. page* |
|---|---|---|---|---|
| **Configuration of numerical parameters edition** | | | | |
| Edit | Numerical parameters edit mode | dig | | 31 |

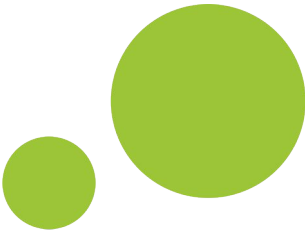

**SIMEX Sp. z o.o.**
**ul. Wielopole 11**
**80-556 Gdańsk**
**Poland**

**tel.: (+48 58) 762-07-77**
**fax: (+48 58) 762-07-70**

**http://www.simex.pl**
**e-mail: info@simex.pl**