GAX7150AN

Shaft extension for door-coupling handles GAX66N, GAX66NB and mechanical coupling system GAX6001, length 150mm long; □7mm/0.3”



Dimensions

GAX7...A used with GAX60 B and GAX66/66B

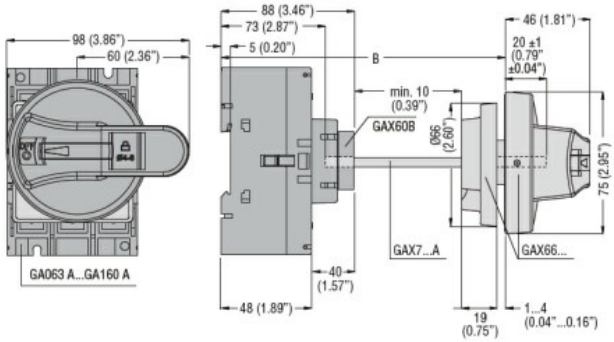

GAX7...A used with GAX60 01 and GAX66/66B

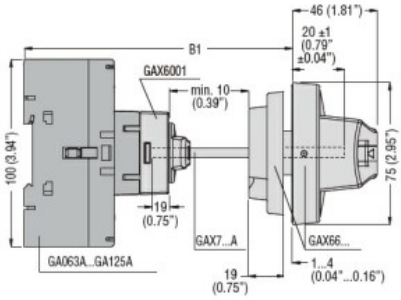

Extension	Length	B	B1
		with GAX66/66B handle	
	[mm(in)]	[mm(in)]	[mm(in)]
GAX7150A	176 (6.93")	118...229 (4.64"...9.01")	119...205 (4.68"...8.07")
GAX7200A	226 (8.90")	118...279 (4.64"...10.99")	119...255 (4.68"...10.03")
GAX7300A	326 (12.83")	118...379 (4.64"...14.92")	119...355 (4.68"...13.98")

Certifications and compliance

Compliance

CSA C22.2
IEC/EN 60947-1
IEC/EN 60947-3
UL508
UL98

Certifications

CCC
cULus according to UL98 / CSA C22.2 n°4
EAC

ETIM classification

ETIM 8.0	EC002498 - Accessories/spare parts for low-voltage switch technology

The characteristics described in this document are subject to updates or modifications at any time. The descriptions, technical and functional information, illustrations and instructions in this brochure are purely illustrative, and are consequently not contractually binding