8BVF0440H000.001-2

1 General information

- Wide mains input voltage range
- Optimally suited for ACOPOSmulti 8BVP power supply modules
- Compliance with limit values per CISPR11, group 2, class A

2 Order data

Model number	Short description	Figure
	Line filters	
8BVF0440H000.001-2	ACOPOSmulti line filter 45 A, 480 V, increased peak current-carrying capacity	
	Required accessories	
	Terminal block sets	
8BZVF044000.001-2A	Screw clamp set for ACOPOSmulti modules 8BVF0220H000.000-1 and 8BVF0440H000.001-2: 1x 8TB4104.202N-10, 1x 8TB4104.206D-10, 1x 8TB2104.204A-00	
	Optional accessories	
	Terminal blocks	
8TB2104.204A-00	4-pin screw clamp, single row, spacing: 5.08 mm, label 4: T- T + F- F+, A keying: 0000	
8TB4104.202N-10	4-pin screw clamp, single row, spacing: 10.16 mm, label 2: L1 L2 L3 PE, N keying: 1100	
8TB4104.206D-10	4-pin screw clamp, single row, spacing: 10.16 mm, label 6: L1´ L2´ L3´ PE, D keying: 0011	

Table 1: 8BVF0440H000.001-2 - Order data

3 Technical data

Model number	8BVF0440H000.001-2
General information	
Cooling and mounting method	Wall mounting
Certifications	
CE	Yes
KC	Yes
UL	cULus E225616 Power conversion equipment
Mains connection	
Permissible network configurations	TT, TN [1)]
Mains input voltage	3x 220 to 3x 480 VAC ±10%
Frequency	50 / 60 Hz ±4%
Allocation to power supply module	8BVP0440HC00.000-1 8BVP0440HW00.000-1
Continuous current [2)]	45 A_{eff}
Peak current <10 s	180 A_{eff}
Reduction of continuous current at ambient temperatures starting at 40°C	0.4 A_{eff} per °C
Reduction of continuous current depending on installation elevation	
Starting at 1000 m above sea level	3.6 A_{eff}
Power dissipation at nominal current	210 W
Integrated line filter per EN 61800-3, category C3 [3)]	Yes
Design	
L1, L2, L3, PE and L1´, L2´, L3´, PE	Male connector
PE	M5 threaded bolt
Shield connection	
On mains	No
On device	Yes [4)]

Table 2: 8BVF0440H000.001-2 - Technical data

Model number	8BVF0440H000.001-2
Terminal connection cross section	
Flexible and fine wire lines	
With wire end sleeves	0.5 to 16 mm²
Approbation data	
UL/C-UL-US	20 to 6 AWG
CSA	20 to 6 AWG
Terminal cable cross section dimension of shield connection	23 to 35 mm
Fan connection	
Max. power consumption during operation ($P_{Fan8B-VF...}$)	8.25 W
Design	
F+, F-	Male connector
Terminal connection cross section	
Flexible and fine wire lines	
With wire end sleeves	0.25 to 2.5 mm²
Approbation data	
UL/C-UL-US	30 to 12 AWG
CSA	28 to 12 AWG
Temperature sensor connection	
Design	
T+, T-	Male connector
Terminal connection cross section	
Flexible and fine wire lines	
With wire end sleeves	0.25 to 2.5 mm²
Approbation data	
UL/C-UL-US	30 to 12 AWG
CSA	28 to 12 AWG
Electrical characteristics	
Discharge capacitance	14.1 µF
Operating conditions	
Permissible mounting orientations	
Hanging vertically	Yes
Lying horizontally	Yes
Standing horizontally	No
Installation at elevations above sea level	
Nominal	0 to 500 m
Maximum [5]	4000 m
Pollution degree per EN 61800-5-1	2 (non-conductive pollution)
Overvoltage category per EN 61800-5-1	III
Degree of protection per EN 60529	IP20
Environmental conditions	
Temperature	
Operation	
Nominal	5°C to 40°C
Maximum [6]	55°C
Storage	-25°C to 55°C
Transport	-25°C to 70°C
Relative humidity	
Operation	5 to 85%
Storage	5 to 95%
Transport	Max. 95% at 40°C
Mechanical characteristics	
Dimensions	
Width	135 mm
Height	378 mm
Depth	212 mm
Weight	15 kg

Table 2: 8BVF0440H000.001-2 - Technical data

1) TT and TN power systems are commonly referred to as "Delta/Wye with grounded wye neutral" in the USA.
2) Valid for the following conditions: 40°C ambient temperature, installation elevation <500 m above sea level.
3) Limit values from EN 61800-3 C3 (second environment). In order to conform to the EMC limit values, the 8BVP power supply module connected to the 8BVF line filter must be operated at the nominal switching frequency (5 kHz). The total length of all motor cables on each drive system (and for each 8BVF line filter) is not permitted to exceed 900 m. The cable length between the 8BVF line filter and the 8BVP power supply module is not permitted to exceed 5 m. The maximum permissible motor cable length per motor connection must also be taken into consideration (see 8BVI inverter modules).
4) Cables do not have to be shielded up to a total length of 3 m between the line filter, regeneration choke and power supply module. Please contact B&R when using cable lengths >3 m.
5) Continuous operation at an installation elevation of 500 m to 4,000 m above sea level is possible taking the specified reduction of continuous current into account. Requirements that go beyond this must be arranged with B&R.
6) Continuous operation at an ambient temperature of 40°C to max. 55°C is possible taking the specified reduction of continuous torque into account, but this results in premature aging of components.

4 8BVF0440H000.001-2 - Dimension diagram and installation dimensions

Up to revision E0:

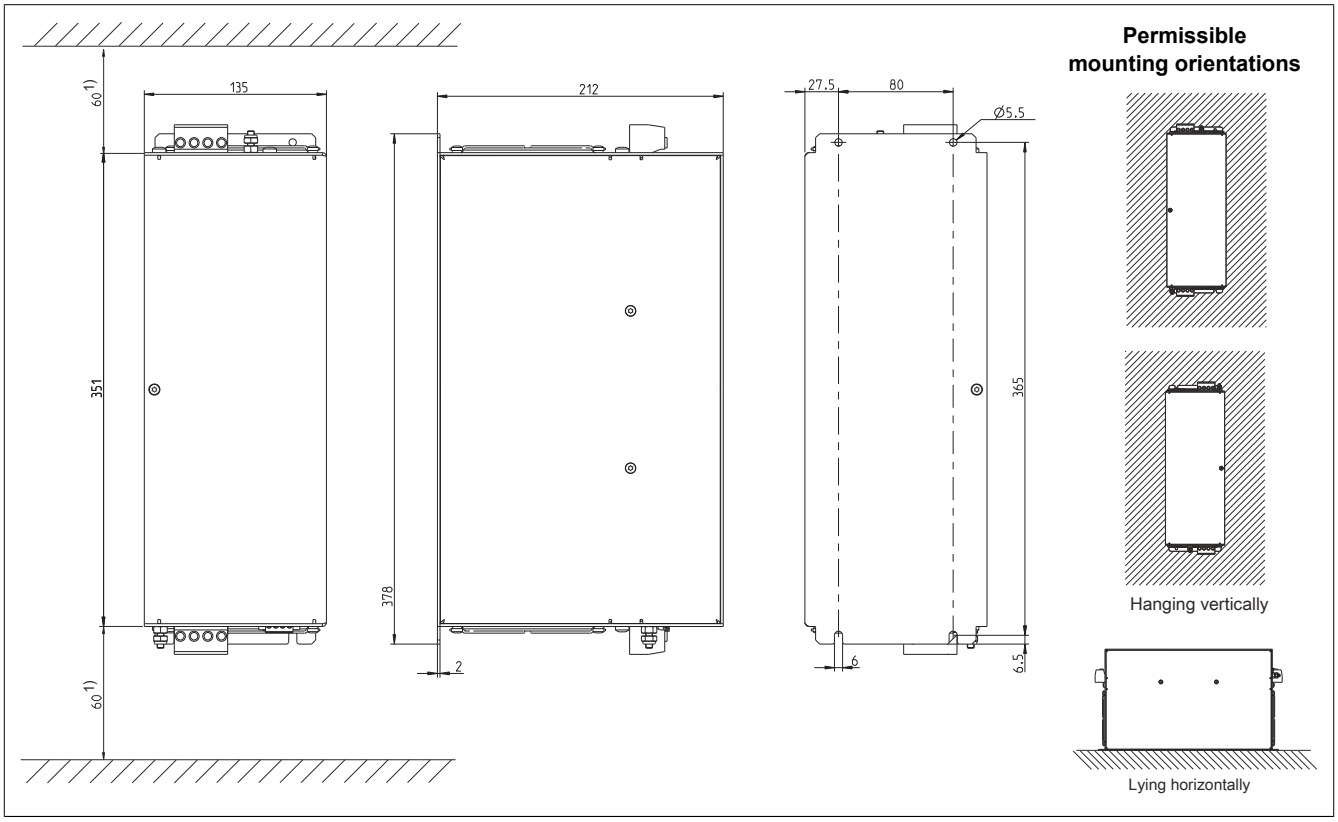

Figure 1: 8BVF0440H000.001-2 - Dimension diagram and installation dimensions (up to revision E0)

1) For sufficient air circulation, a clearance of at least 60 mm must be provided above, below and in front of the module.

Revision F0 and later with reinforced housing construction with identical main dimensions:

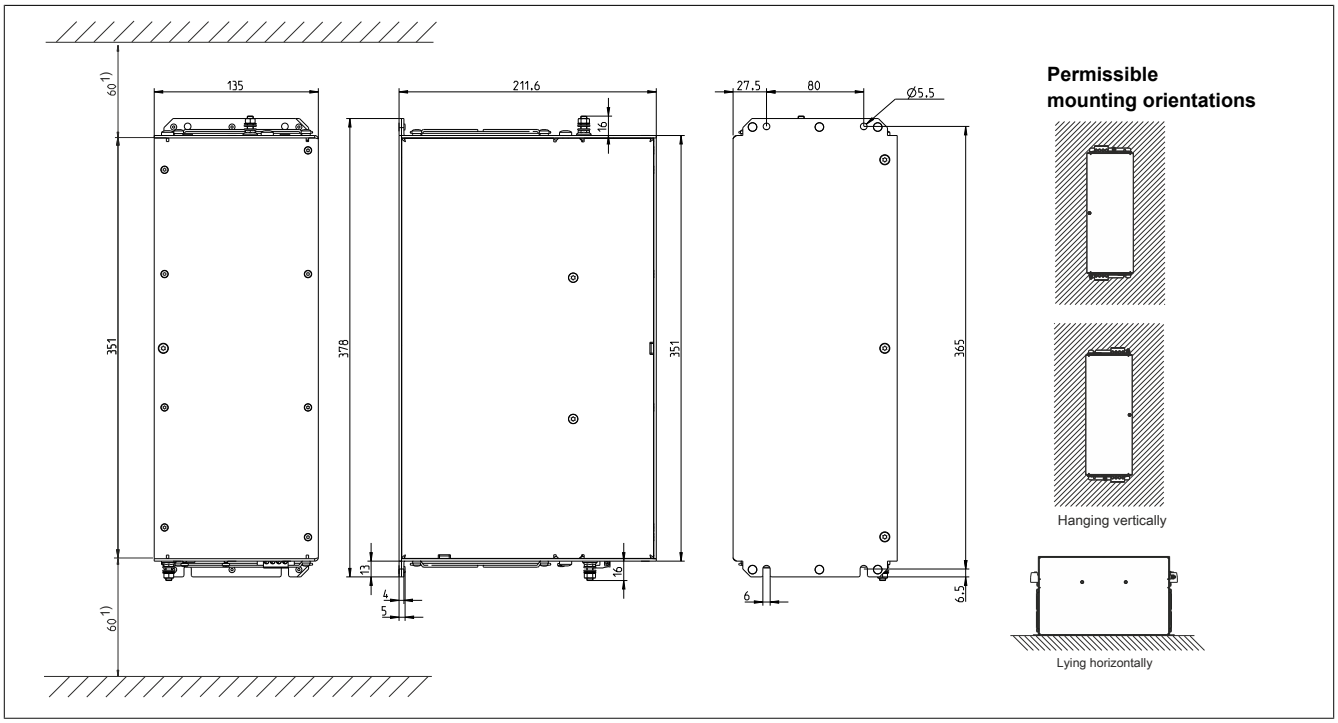

Figure 2: 8BVF0440H000.001-2 - Dimension diagram and installation dimensions (revision F0 and later)

1) For sufficient air circulation, a clearance of at least 60 mm must be provided above, below and in front of the module.

5 Wiring

Warning!

ACOPOSmulti drive systems are only permitted to be used with specially designed line filters. Line filters from third-party manufacturers are not permitted to be used under any circumstances; there is a risk of irreparable damage to these line filters or components of the ACOPOSmulti drive system.

5.2 8BVF0220H000.000-1, 8BVF0440H000.001-2 - Pinout overview

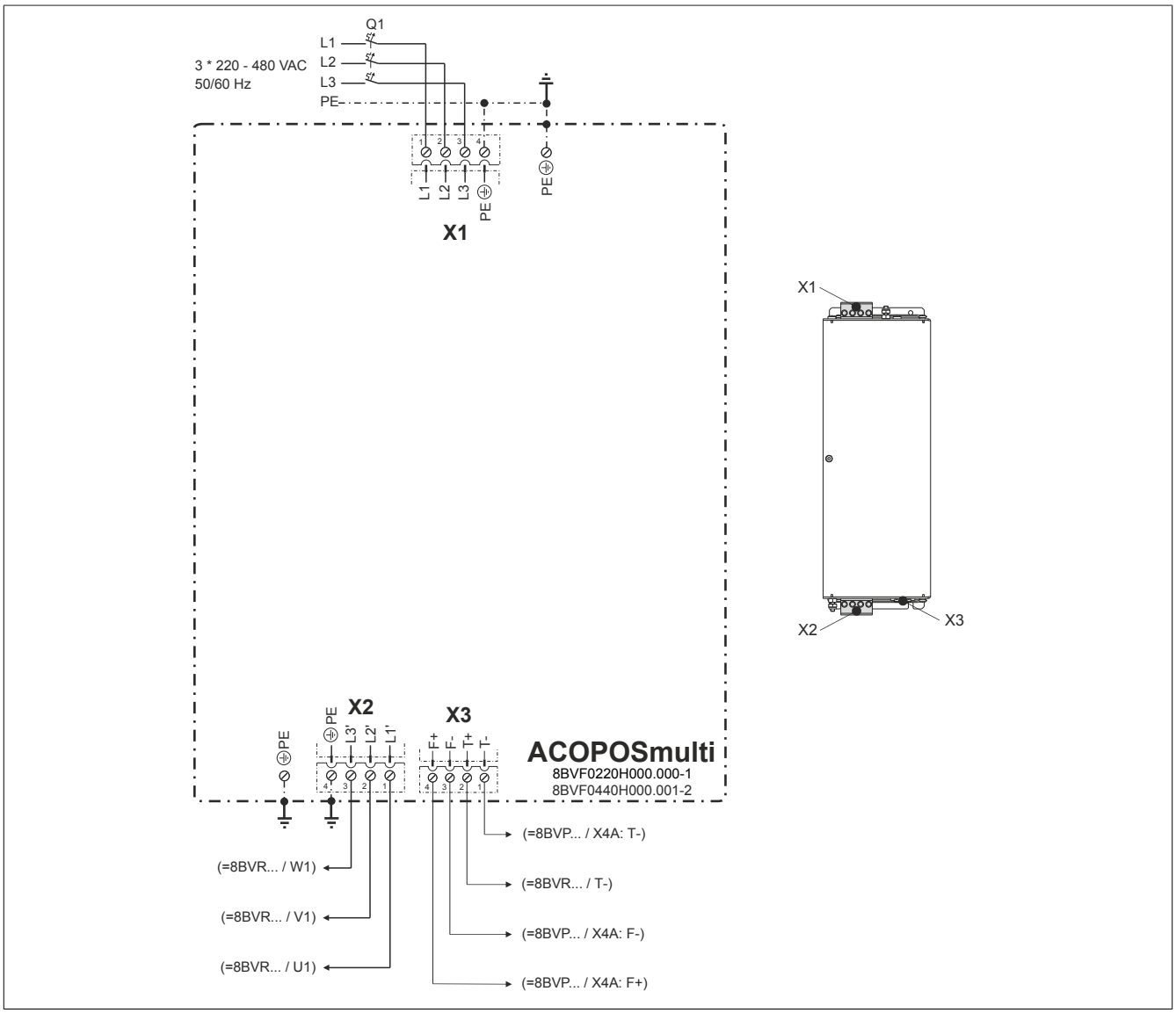

Figure 3: 8BVF0220H000.000-1, 8BVF0440H000.001-2 - Pinout overview

5.3 Connector X1 - Pinout

X1	Description	Function
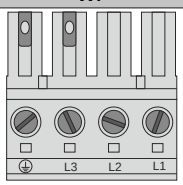	L1	Mains connection L1 (mains side)
	L2	Mains connection L2 (mains side)
	L3	Mains connection L3 (mains side)
	PE	Protective ground conductor

Table 3: 8BVF0220H000.000-1, 8BVF0440H000.001-2 - Connector X1 - Pinout

5.4 Connector X2 - Pinout

X2	Description	Function
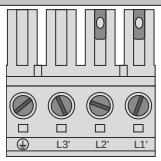	L1'	Mains connection L1 (load side)
	L2'	Mains connection L2 (load side)
	L3'	Mains connection L3 (load side)
	PE	Protective ground conductor

Table 4: 8BVF0220H000.000-1, 8BVF0440H000.001-2 - Connector X2 - Pinout

Warning!

The position of the protective ground connection (PE) on connectors X1 and X2 differs from the position of the protective ground connection on connector X5A of inverter modules 8BVI0220 / 8BVI0440 and power supply modules 8BVP0220 / 8BVP0440!

5.5 Connector X3 - Pinout

X3	Description	Function
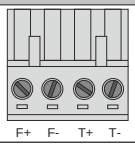	T-	Load: Temperature sensor -
	T+	Load: Temperature sensor +
	F-	Load: Fan -
	F+	Load: Fan +

Table 5: 8BVF0220H000.000-1, 8BVF0440H000.001-2 - Connector X3 - Pinout

5.6 Additional protective ground connection (PE) (power system and load side)

The protective ground conductor is secured to the M5 threaded bolt (power system and load side) provided for this purpose using a cable lug.

Figure		Pin	Description	Function
		---	PE	Protective ground conductor
View from above (mains side)	View from below (load side)			
Terminal cross section		**[mm²]**		**AWG**
Cable lug for M5 threaded bolt		0.25 - 16		23 - 5

Table 6: 8BVF0220H000.000-1, 8BVF0440H000.001-2 - Additional protective ground connection (PE)

Danger!

Before switching on the power supply, it must be ensured that the housing of the line filter is properly connected to ground potential (PE rail). The ground connection must be established even when testing the line filter or operating it for a short time!

5.7 Input/Output circuit diagram

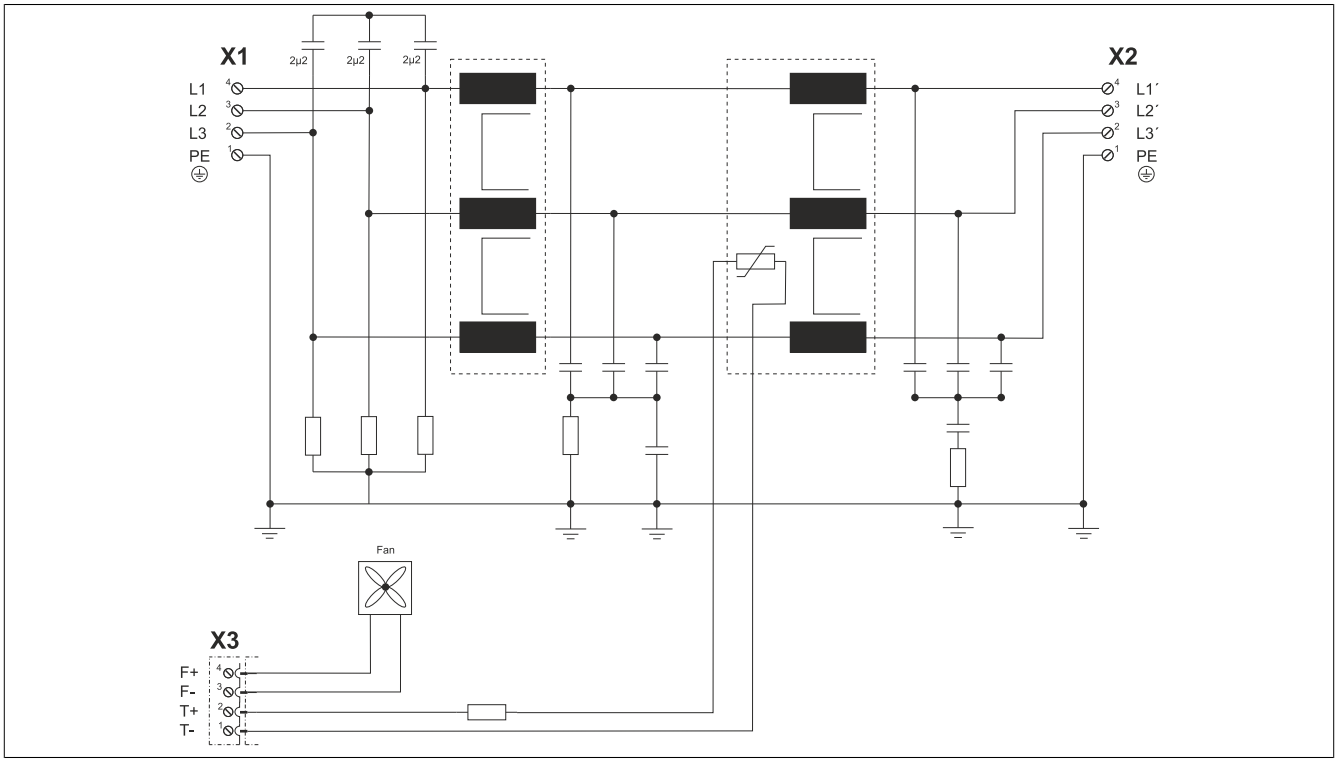

Figure 4: 8BVF0220H000.000-1, 8BVF0440H000.001-2 - Input/Output circuit diagram