Product datasheet - Sku

Various tools Electronics

1150.MT Micro-Tech® swivel-base vice



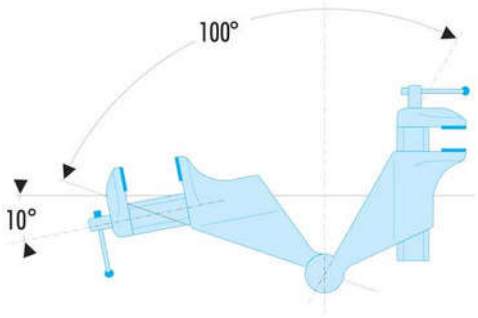

- Designed for a comfortable work position ensuring high precision.
- Instant locking lever on swivel base.
- Fastener for firm fastening on a support of 80 mm thick max.
- Jaws in glued plastic, width: 50 mm.
- Max opening: 70 mm.
- Max depth: 38 mm.

Weight: 1400 g.

FACOM® - All rights reserved