Brand of NTN corporation

Technical data

EXPE209

Bearing units



Grey cast housing, radial insert ball bearing with eccentric locking collar, seal with slinger

KIT CONTENT

EX209G2, PE209

VISUAL (S)

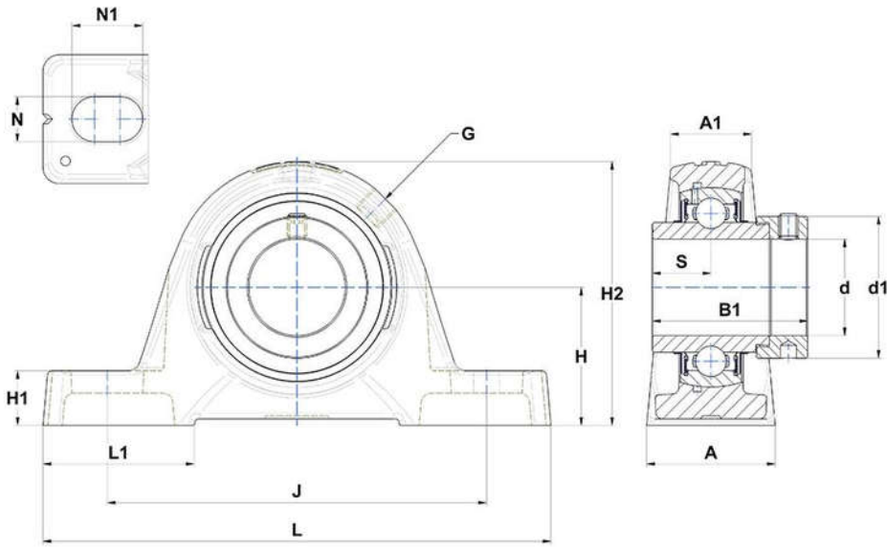

PRODUCT DEFINITION

Brand	SNR
A - Housing width	48 mm
A1 - Housing top width	32 mm
B - Width of Inner Ring	42,8 mm
d - Shaft diameter	45 mm
d1 - Outer dia of eccent. Lock. collar / nut of adapter sleeve	62 mm

NTN Europe
1 rue des Usines · BP 2017 · 74010 Annecy Cedex · France · Tel. +33 (0)4 50 65 30 00
S.A. au capital de 322 639 919 € · RCS ANNECY B 325 821 072 · Id. Fiscale : FR 48 325 821 072
SIRET 325 821 072 00015 · Code APE 2815 Z · Code NACE 28.15

PRODUCT DEFINITION	
G - Grease fitting	R1/8"
H - Distance mounting base to centerline spheric. seating diam.	54 mm
H1 - Housing foot height	21,5 mm
H2 - Housing height	107 mm
J - Mounting holes distance	150 mm
L - Housing length	192 mm
L1 - Housing foot length	54,5 mm
N - Mounting hole dimension	14 mm
N1 - Mounting hole length	29 mm
S - Distance front side/bearing centre	21,4 mm

PRODUCT PERFORMANCE	
C - Dynamic load rating	31850000 mN
C0 - Static load rating	20800000 mN
Operating temperature min.	253,15 °K
Operating temperature max.	373,15 °K

OTHER FEATURES	
Mass	2,37 kg
Recommended tightening torque for set screw	11.5 N-m