Brand of NTN Group

Technical data

6209SEE

Single row deep groove ball bearings



Deep groove ball bearing, radial contact, pressed steel cage, spherical outer diameter, contact seals on both sides

VISUAL (S)

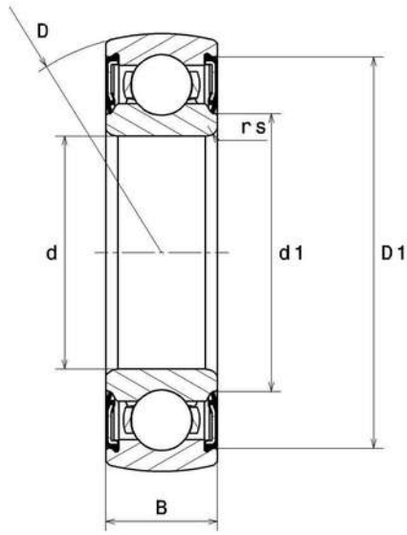

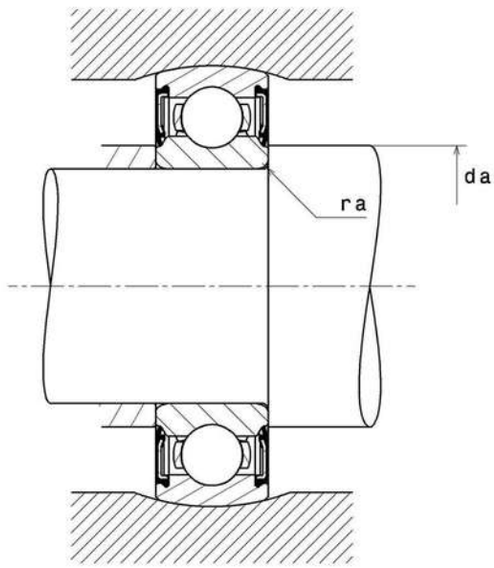

NTN Europe
1 rue des Usines · BP 2017 · 74010 Annecy Cedex · France · Tel. +33 (0)4 50 65 30 00
S.A. au capital de 322 639 919 € · RCS ANNECY B 325 821 072 · Id. Fiscale : FR 48 325 821 072
SIRET 325 821 072 00015 · Code APE 2815 Z · Code NACE 28.15

6209SEE
Single row deep groove ball bearings

PRODUCT DEFINITION	
Brand	SNR
d - Internal diameter	45 mm
D - External diameter	85 mm
B - Bearing/Inner ring width	19 mm
d1 - External diameter inner ring	54,5 mm
D1 - Inner diameter outer ring	75,6 mm
rs - Min fillet radius	1,1 mm
rNs - Min fillet radius	0 mm
Radial clearance class	CN
Mass	0,404 kg

PRODUCT PERFORMANCE	
C - Dynamic load	34500000 mN
C0 - Static load	20400000 mN
Cu - Fatigue limit load	930000 mN
f0 - Coefficient	14.1
N lim - Mechanical Limit Speed	31800 °/s
Tmin - Min operating temperature	253,15 °K
Tmax - Max operating temperature	393,15 °K

BEARING FREQUENCIES	
BPFO - Over rolling frequency on outer ring (60 rpm)	3.621 Hz
BPFI - Over rolling frequency on inner (60 rpm)	5.379 Hz
BSF - Over rolling frequency on rolling element (60 rpm)	4.923 Hz
BRF - Rotational frequency – rolling element (60 rpm)	2.462 Hz

BEARING FREQUENCIES

FTF - Rotational frequency - cage (60 rpm)	0.402 Hz

ABUTMENT

da min - Min shoulder diameter IR	51,5 mm
da max - Max shoulder diameter IR	54,5 mm
Da max - Max shoulder diameter OR	78,5 mm
ra max - Max shaft & housing fillet radius	1 mm

INDUSTRY CALCUL FACTORS

Equivalent dynamic radial load

P = X.Fr + Y.Fa

$\frac{f_0 F_a}{C_0}$	e	Fa / Fr ≤ e		Fa / Fr > e	
		X	Y	X	Y
0.172	0.19	1	0	0.56	2.3
0.345	0.22				1.99
0.689	0.26				1.71
1.03	0.28				1.55
1.38	0.3				1.45
2.07	0.34				1.31
3.45	0.38				1.15
5.17	0.42				1.04
6.89	0.44				1

Equivalent static radial load

Po = Xo.Fr + Yo.Fa

X_0	Y_0
0.6	0.5

For single or DT bearing arrangement :

If Po <Fr, then use Po = Fr