Brand of NTN corporation

Technical data

EXFL205

Bearing units



Grey cast housing, radial insert ball bearing with eccentric locking collar, seal with slinger

KIT CONTENT

EX205G2, FL205

VISUAL (S)

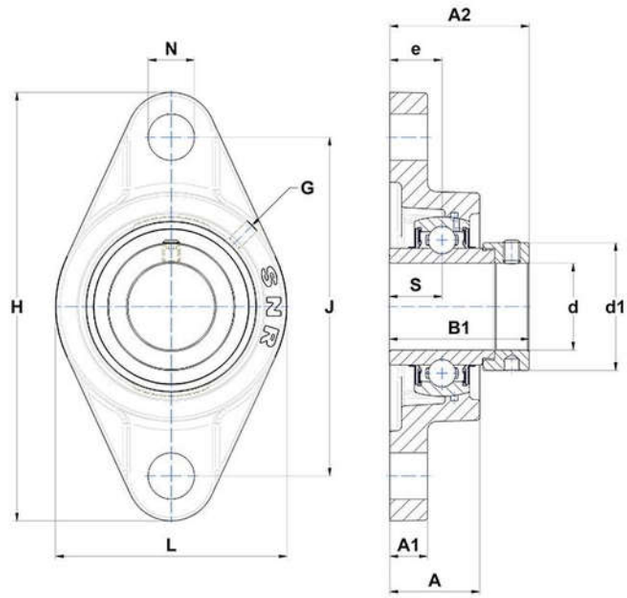

PRODUCT DEFINITION

Brand	SNR
A - Housing height	27 mm
A1 - Housing foot height / flange height	13 mm
A2 - Total height from mounting surface	42,9 mm
B - Width of Inner Ring	34,8 mm
B1 - Overall width Inner Ring	44,3 mm

EXFL205
Bearing units

PRODUCT DEFINITION	
d - Shaft diameter	25 mm
d1 - Outer dia of eccent. Lock. collar / nut of adapter sleeve	37,4 mm
e - Distance mounting surface to bearing center	16 mm
G - Grease fitting	M6x1
H - Housing length, width or diameter	130 mm
J - Mounting holes distance	99 mm
L - Housing width / diameter	68 mm
N - Mounting hole dimension	16 mm
S - Distance front side/bearing centre	17,4 mm

PRODUCT PERFORMANCE	
C - Dynamic load rating	14000000 mN
C0 - Static load rating	7880000 mN
Operating temperature min.	253,15 °K
Operating temperature max.	373,15 °K

OTHER FEATURES	
Mass	0,66 kg
Recommended tightening torque for set screw	5.5 N-m