stay connected

JUNIOR TIMER VALVE PLUG 90°

PUR 2x0,5 black drag ch AIN 1.5m

Female 90°
0...230 V AC/DC
without components

Plastic housings with good resistance against chemicals and oils. The resistance to aggressive media should be individually tested for your application. Further details on request. Further cable lengths on request.

Link to Product

Illustration



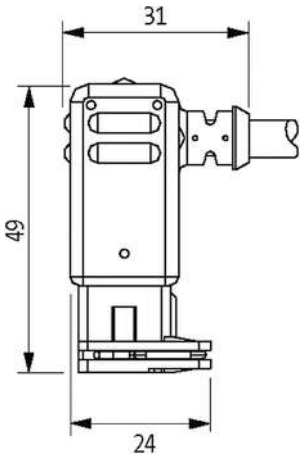

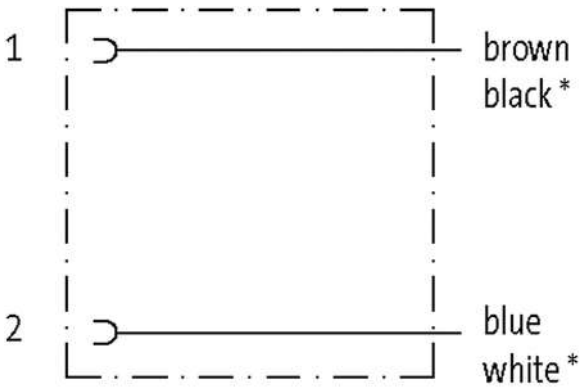

The information in this brochure has been compiled with the utmost care.
Liability for the correctness completeness and topicality of the information is restricted to gross negligence. Version: 01/20

stay connected

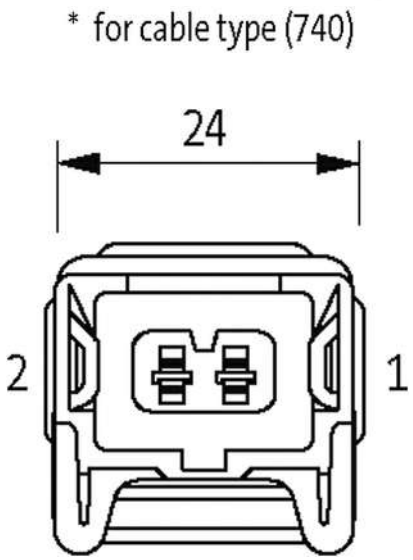

Product may differ from Image

Form	
Form	70301
Cables	
No./diameter of wires	2× 0.5 mm²
Wire isolation	TPE (bk, wh)
C-track properties	2 Mio.
Jacket Color	black
Material (jacket)	PUR
Outer Ø	5.0 mm ±5%
Bend radius (moving)	10× outer Ø
Temperature range (fixed)	-50...+90 °C
Temperature range (mobile)	-30...+90 °C
Cable identification	740
Approval (cable)	CE conform
Cable weight [g/m]	36,30
Material (wire)	Cu wire, bare
Resistor (core)	max. 39 Ω/km (20 °C)
Single wire Ø (core)	0.1 mm
Construction (core)	64× 0.1 mm (multi-strand wire class 6)
Diameter (core)	2× 0.5 mm²
AWG	similar to AWG 20
Material (wire isolation)	TPE-E
Wire-Ø incl. isolation	1.5 mm ±5%
Color/numbering of wires	bk, wh
Stranding combination	2 wires twisted
Shield	no
Material (jacket)	PUR
Outer-Ø (jacket)	5.0 mm ±5%
Color (jacket)	black
Nominal voltage	300/500 V AC
Test voltage	2000 V AC
Temperature range (fixed)	-50...+90 °C
Temperature range (mobile)	-30...+90 °C

The information in this brochure has been compiled with the utmost care.
Liability for the correctness completeness and topicality of the information is restricted to gross negligence. Version: 01/20

Bend radius (moving)	10× outer Ø
No. of bending cycles (C-track)	max. 2 Mio. (25 °C)
Traversing distance (C-track)	max. 5 m (horizontal)
Travel speed (C-track)	max. 3.3 m/s
Acceleration (C-track)	max. 5 m/s²
Technical Data	
Operating voltage	0...230 V AC/DC
Operating current per contact	max. 4 A
Housing	Black plastic, flame retardant
Protection	IP65 inserted and tightened (EN 60529)
Rated surge voltage	4.0 kV
General data	
Temperature range	-25...+85 °C, depending on cable quality
Commercial data	
country of origin	DE
customs tariff number	85444290
EAN	4048879285735
eClass	27279218
Packaging unit	1

The information in this brochure has been compiled with the utmost care.
Liability for the correctness completeness and topicality of the information is restricted to gross negligence. Version: 01/20