Short-stroke cylinder, Series SSI, Double-acting, with magnetic piston, non-rotating

R480637965

- Ideal for simple assembly and clamping movements, tight installation space, and short strokes
- Mount on moving machine parts possible thanks to their low weight
- Intelligent connection concept
- Available in piston diameters from 12 mm to 100 mm
- Available as piston rod, single or double-acting cylinders, with a hollow piston rod, as a non-rotating version with a front plate, or an especially short version without a magnet

AVENTICS Series SSI Short-stroke cylinders (ISO 15524)

The AVENTICS Series SSI are short stroke cylinders in accordance with the latest ISO standard 15524. The cylinders are compact and up to 30% lighter than comparable cylinders thanks to weight optimized profiles. In addition, they provide a high degree of flexibility in sensor assembly and extremely effective elastic cushioning.



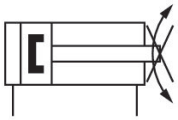

Technical data

Industry	Industrial
Standards	ISO 15524
Piston Ø	40 mm
Stroke	10 mm
Ports	G 1/8
Functional principle	Double-acting
Cushioning	Elastic cushioning
Magnetic piston	Piston with magnet
Environmental requirements	Industry standard
Piston rod thread - type	Piston rod: internal thread
Piston rod	non-rotating, with front plate
Scraper	Standard Industry Scraper
Pressure for determining piston forces	6,3 bar
Retracting piston force	665 N
Extracting piston force	792 N
Min. ambient temperature	-20 °C
Max. ambient temperature	80 °C
Min. working pressure	0.6 bar
Max. working pressure	10 bar

Short-stroke cylinder, Series SSI, Double-acting, with magnetic piston, non-rotating

R480637965

~~Impact energy~~	~~0.24 J~~
Weight 0 mm stroke	0.334 kg
Weight +10 mm stroke	0.045 kg
Stroke max.	150 mm
Medium	Compressed air
Min. medium temperature	-20 °C
Max. medium temperature	80 °C
Max. particle size	50 µm
Min. oil content of compressed air	0 mg/m³
Max. oil content of compressed air	5 mg/m³

Material

Piston rod	Stainless Steel
Scraper material	Polyurethane
Seal material	Polyurethane
Material, front cover	Aluminum
Cylinder tube	Aluminum
End cover	Aluminum
Front plate	Aluminum
Guide rod	Stainless Steel
Part No.	R480637965

Technical information

The pressure dew point must be at least 15 °C less than ambient and medium temperature and may not exceed 3 °C.

The oil content of compressed air must remain constant during the life cycle.

Use only the approved oils from AVENTICS. Further information can be found in the “Technical information” document (available in https://www.emerson.com/en-us/support).

Short-stroke cylinder, Series SSI, Double-acting, with magnetic piston, non-rotating

R480637965

Dimensions

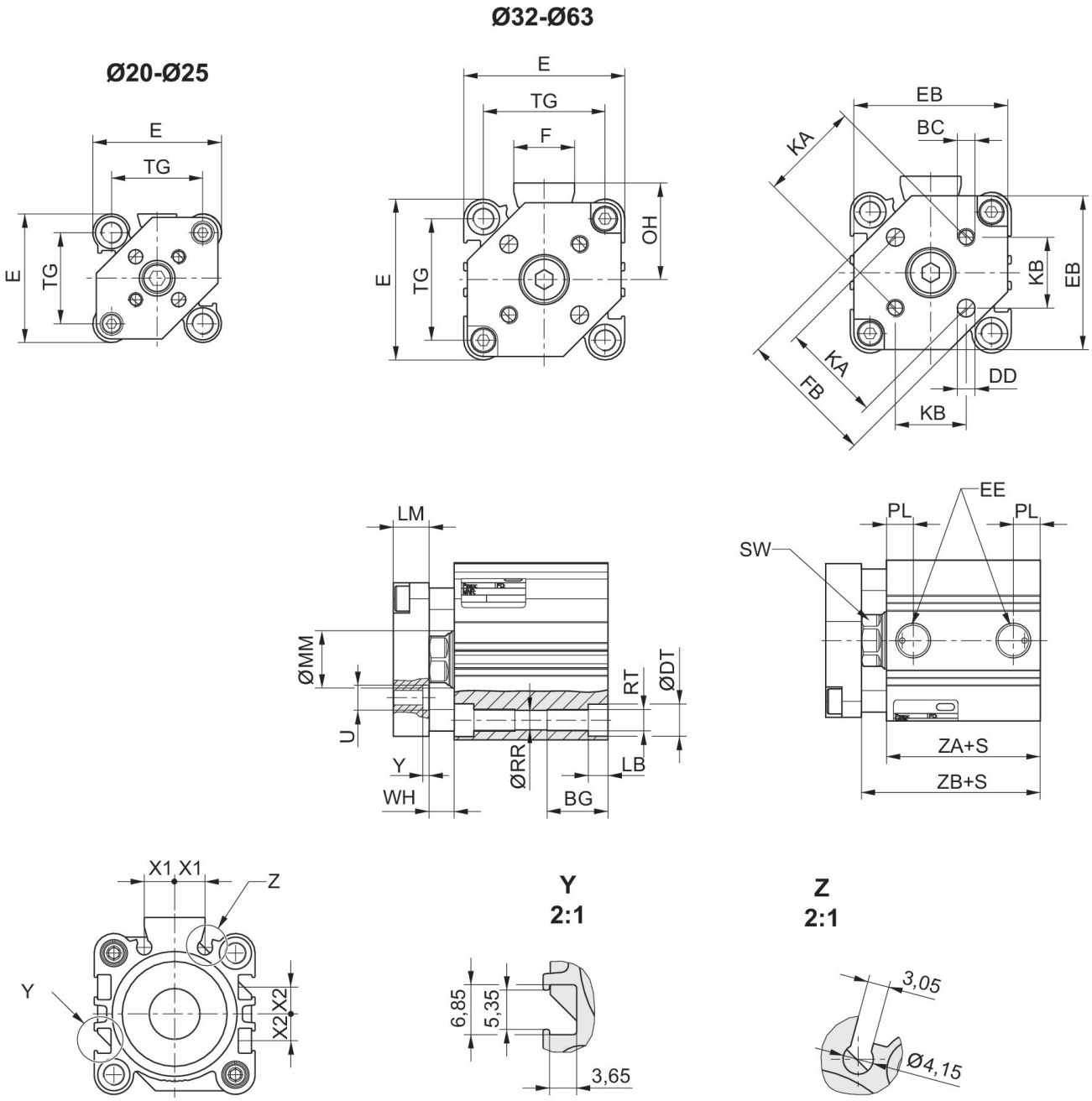

S = stroke

Piston Ø	BC	BG	ØDD H13	ØDT	E	EB	EE	F	FB
20	M4	16	4	9	36	34	M5	-	26
25	M5	16	5	9	40	38	M5	-	30
32	M5	16	5	9	45	43	G 1/8	17	38
40	M5	16	5	9	52	50	G 1/8	17	46
50	M6	20	6	11	64	62	G 1/4	21	58
63	M6	25	6	14	77	74	G 1/4	21	69

Short-stroke cylinder, Series SSI, Double-acting, with magnetic piston, non-rotating

R480637965

Piston Ø	KA	KB	LB max.	LM	ØMM f8	OH	PL	ØRR	RT
20	17 ±0,1	12 ±0,1	5,5	8	10	-	5,5	5,55	M6
25	22 ±0,1	15,6 ±0,1	5,5	8	12	-	5,5	5,55	M6
32	28 ±0,2	19,8 ±0,2	5,5	10	16	27	7,5	5,55	M6
40	33 ±0,2	23,3 ±0,2	5,5	10	16	31	7,5	5,55	M6
50	42 ±0,2	29,7 ±0,2	8	12	20	39	10,5	7,4	M8
63	50 ±0,2	35,4 ±0,2	10,5	12	20	45,5	10,5	9,3	M10

Piston Ø	SW	TG	WH	X1	X2	ZA±0,2	ZB±2
20	8	25,5 ±0,3	4,5 ±1,5	5,7	4,3	29,5	34
25	10	28 ±0,3	5 ±1,5	6	5	32,5	37,5
32	13	34 ±0,3	7 ±2	8,5	7,5	33	40
40	13	40 ±0,3	7 ±2	10,8	11	39,5	46,5
50	17	50 ±0,5	8 ±2	14	13	40,5	48,5
63	17	60 ±0,5	8 ±2	17	17	46	54

Max. permissible torque, Dynamic

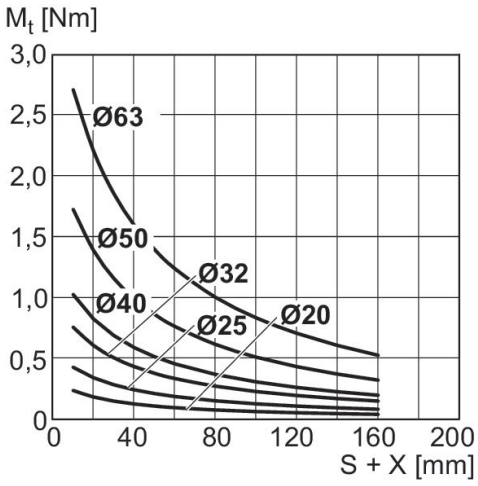

X = distance between force application point and cylinder cover
M = max. permissible torque
S = stroke

Maximum admissible lateral force dynamic

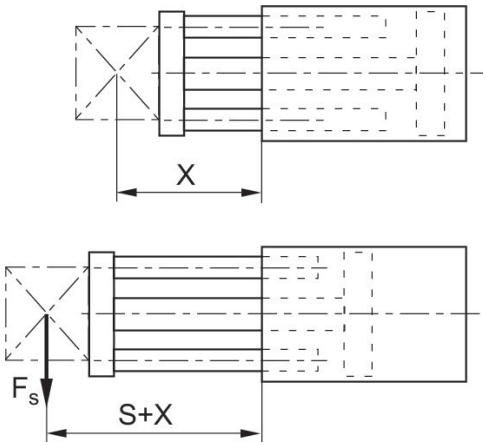

X = distance between force application point and cylinder cover
FS = lateral force
S = stroke

Short-stroke cylinder, Series SSI, Double-acting, with magnetic piston, non-rotating

R480637965

Max. permissible torque, Dynamic

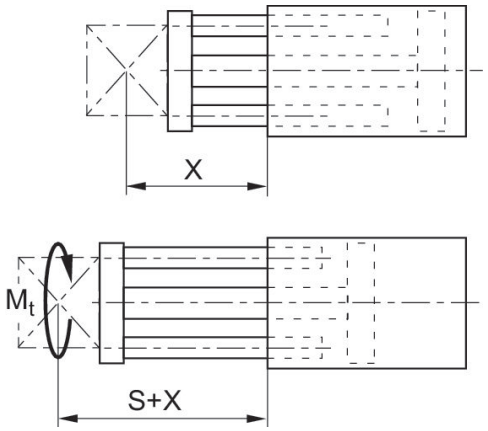

X = distance between force application point and cylinder cover
M = max. permissible torque
S = stroke

Maximum admissible lateral force dynamic

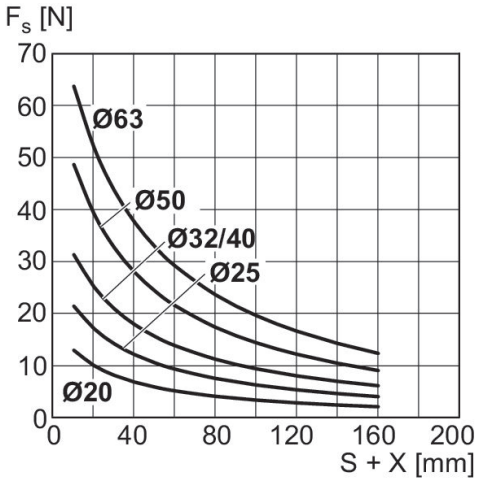

X = distance between force application point and cylinder cover
FS = lateral force
S = stroke

Short-stroke cylinder, Series SSI, Double-acting, with magnetic piston, non-rotating

R480637965

Overview drawing

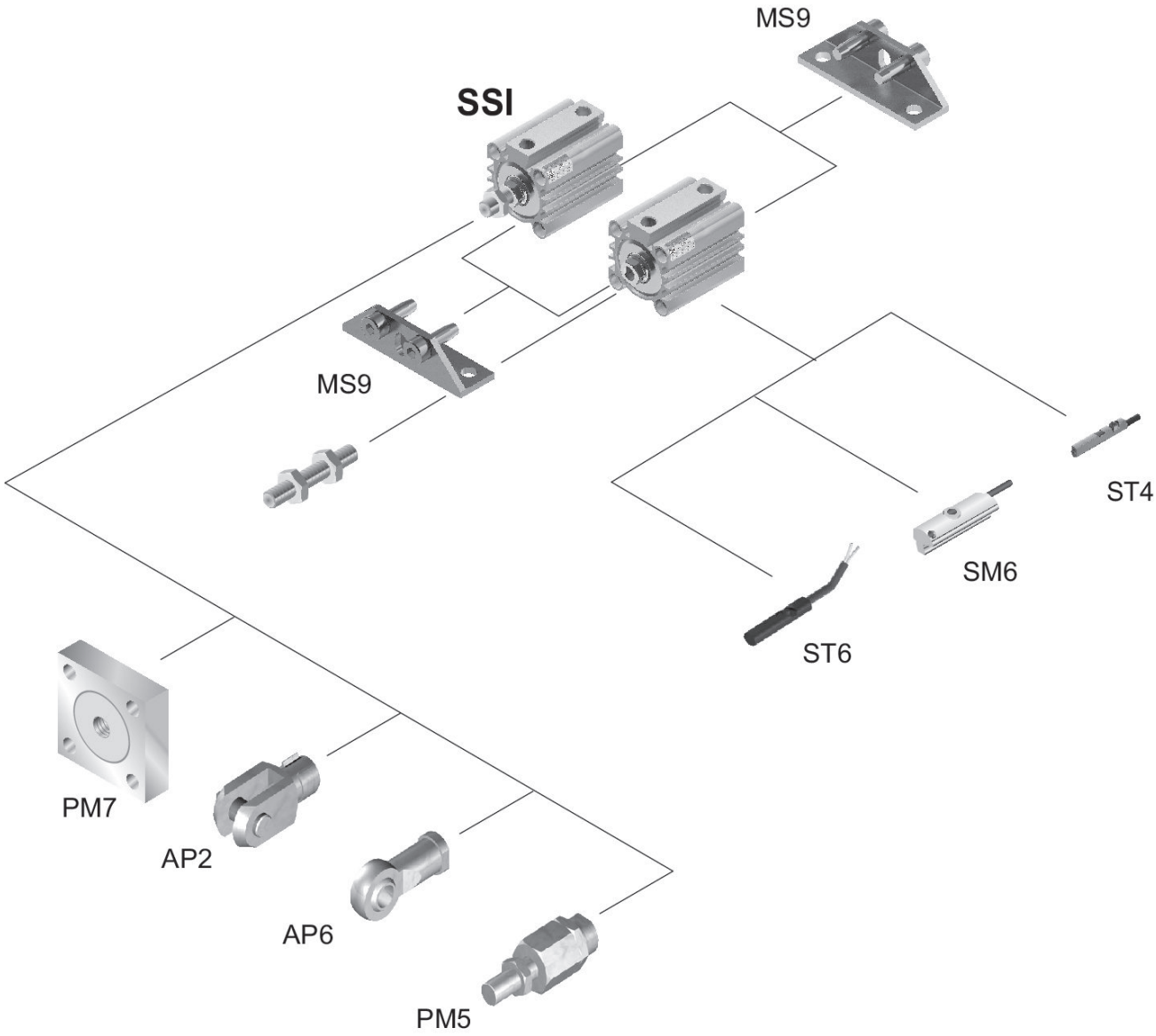

Use our Internet configurator to order variants with an external thread.
NOTE: This overview drawing is only for orientation to indicate where the various accessory parts can be fastened to the cylinder. The illustration has been simplified for this purpose. It is thus not possible to derive the dimensions from this overview.